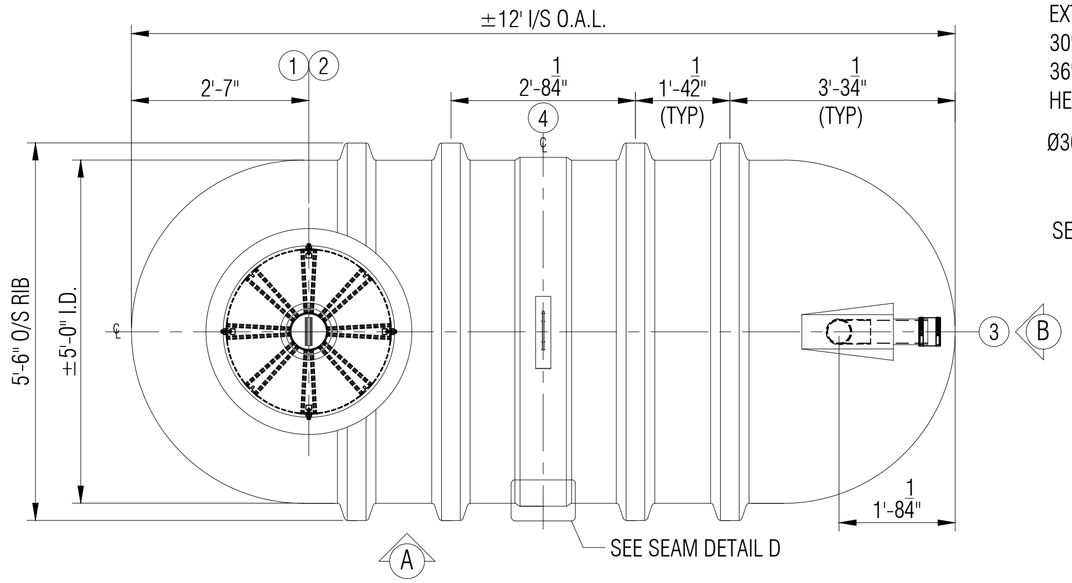

PLAN

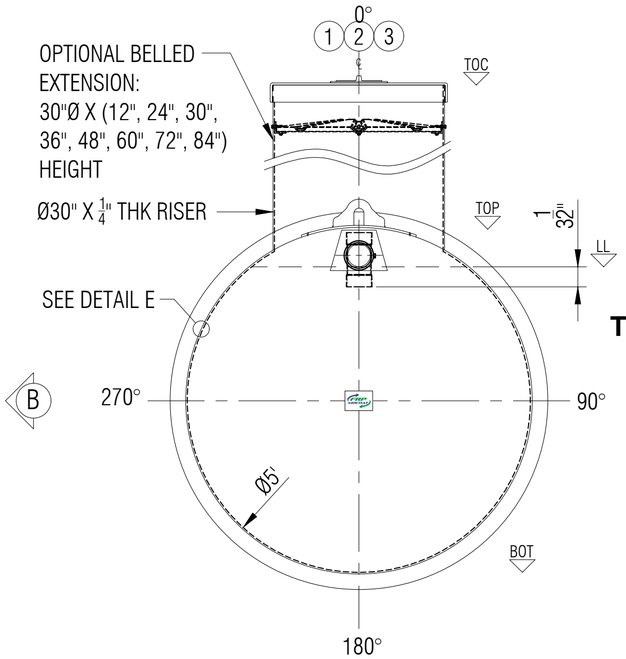

ELEVATION B

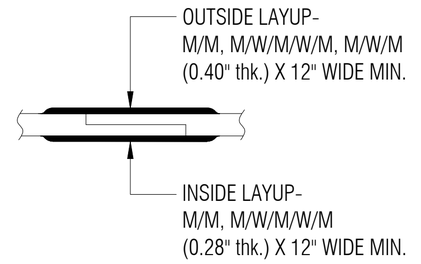

TYPICAL BODY JOINT DETAIL D

NTS

LEGEND:
TOC - TOP OF CAP LID
TOF - TOP OF FLANGE
TOP - TOP CYLINDER
BOT - BOTTOM CYLINDER
I/S - INSIDE
LL - LIQUID LEVEL
O.A.H.-OVERALL HEIGHT
O.A.L.-OVERALL LENGTH
I/S - INSIDE
O/S - OUTSIDE
Ø - DIAMETER
° - DEGREE/S
TYP- TYPICAL
℄ - CENTER LINE
NTS - NOT TO SCALE

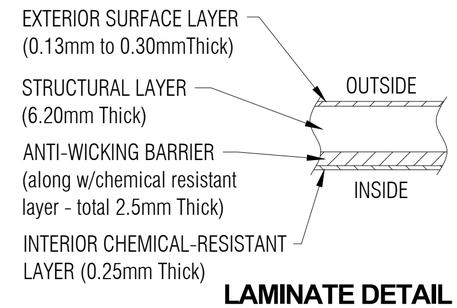

LAMINATE DETAIL E

NTS

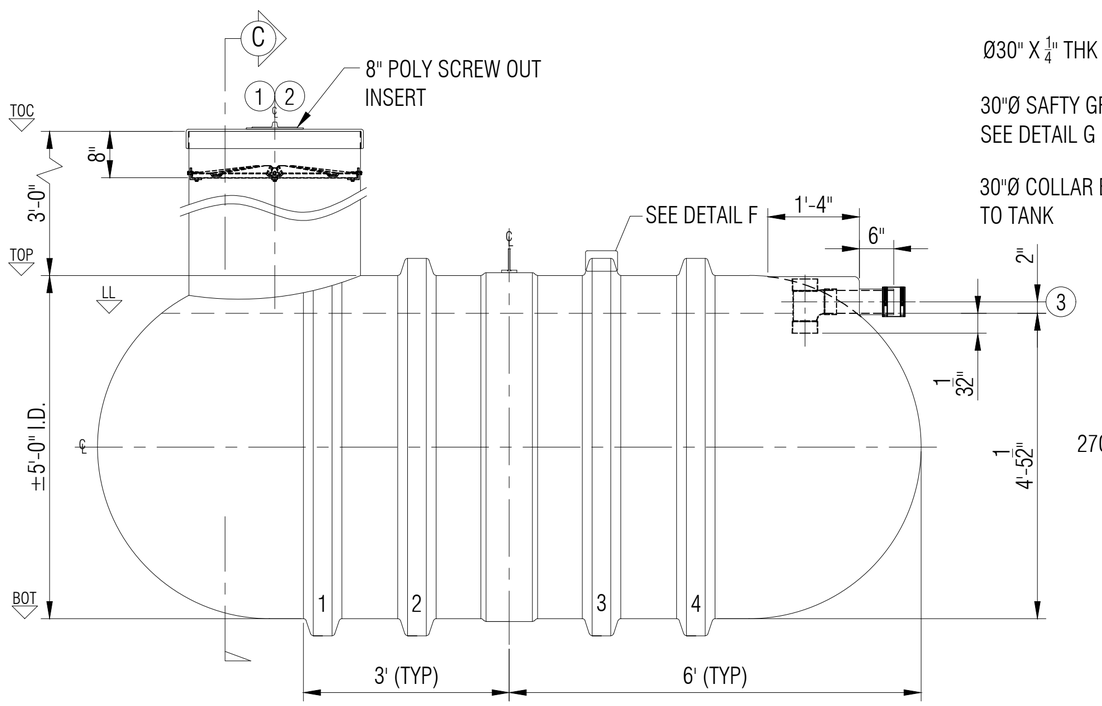

ELEVATION A

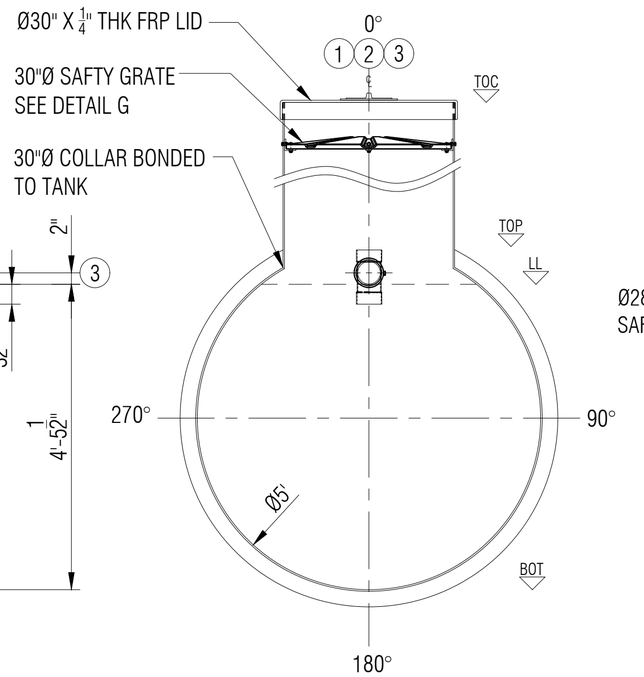

SECTION C

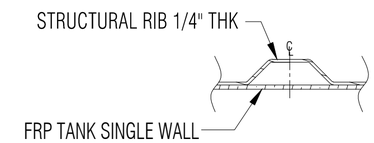

RIB LAMINATE DETAIL F

NTS

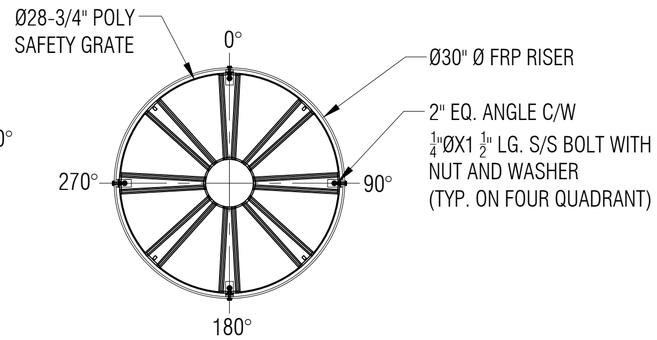

5 SAFETY GRATE DETAIL G

SCALE: 1:15

GENERAL NOTES:
- CSA B66 CERTIFIED FRP SEWAGE HOLDING TANK.
- RATED FOR 12' OF BURIAL DEPTH AND NO TRAFFIC LOADING.
- ALL DRILLED HOLES FLANGES TO BE COATED WITH RESIN.
- SAFETY GRATE CAN WITHSTAND 91 KG. OF DEAD LOAD.
- DIMENSIONS SHOWN IN FEET INCHES FORMAT OTHERWISE NOTED.
- 1/2" FABRICATION TOLERANCE. DOES NOT APPLY TO LAMINATE THICKNESS.

ITEM#	QTY	PART LIST	DESCRIPTION
1	1	30" CAP LID W/ 8"D POLY SCREW OUT INSERT	FPR LID
2	1	30"Ø MANWAY COLLAR	30"Ø FRP MANWAY
3	1	4"Ø PVC DWV STUB PIPE WITH INTERNAL TEEWYE AND FERNCO	INLET
4	1	MID STEEL	LIFT LUG
5	1	POLYETHYLENE SAFETY GRATE C/W HARDWARE	SAFETY GRATE
6			
7			

SHELL THICKNESS:	0.346"
DISH HEAD THICKNESS:	0.351"
RIBS THICKNESS:	0.25" WITH 1 WR
RIB SPACING:	16-1/2" CL TO CL
WEIGHT:	283KG (625LBS)
LENGTH:	3,658MM (12'-0")
WORKING CAPACITY:	5,344 L (1,175 IG/1,410 USG)
OVERALL CAPACITY:	5,682 L (1,250 IG/1,500 USG)

DRAWN:	ATF
CHECKED:	
DATE:	DEC 4, 2024
DESIGNED:	
APPROVED:	MPS
MFG:	DS
QA:	GA
SALES:	TA

CLIENT: FRP/MOCOAT FIBERGLASS LTD.

TITLE: **H1250-DB FRP SEWAGE HOLDING TANK**

FRPMOCOAT FIBERGLASS LTD.

SIZE	DRAWING NUMBER:	REVISION
C	H1250-DB	0

SCALE	WEIGHT:		SHEET
1:20	BURIAL DEPTH:	RATED 12'-0"	1/1

H1250-DB FRP SEWAGE HOLDING TANK