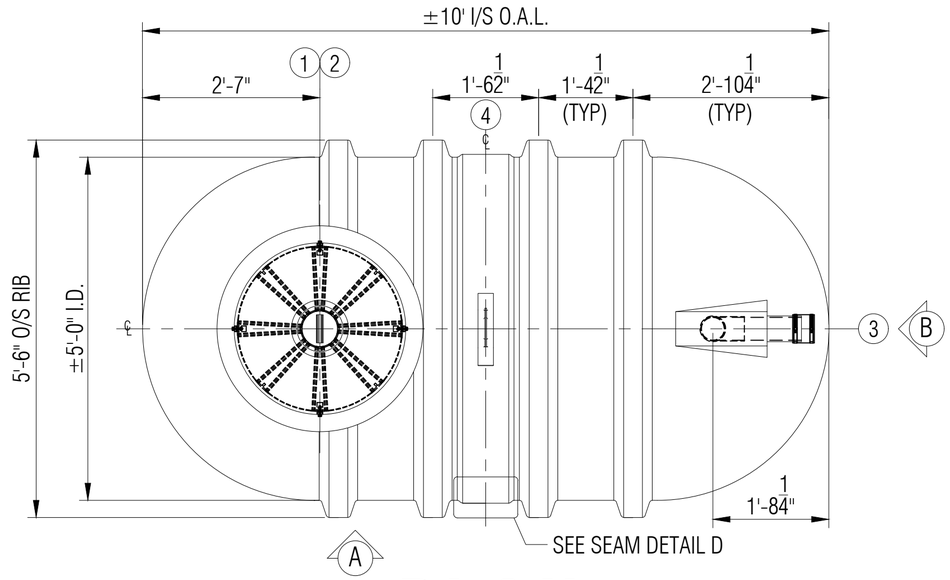

PLAN

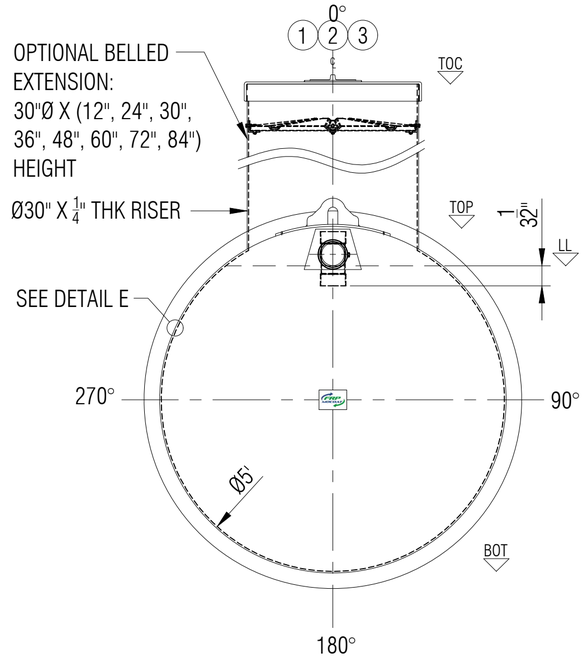

ELEVATION B

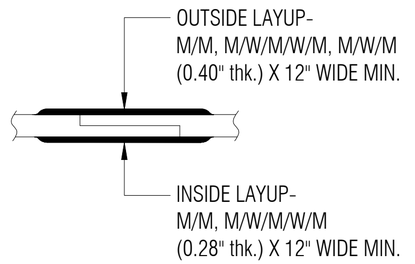

TYPICAL BODY JOINT DETAIL D

NTS

LEGEND:
TOC - TOP OF CAP LID
TOF - TOP OF FLANGE
TOP - TOP CYLINDER
BOT - BOTTOM CYLINDER
I/S - INSIDE
LL - LIQUID LEVEL
O.A.H.-OVERALL HEIGHT
O.A.L.-OVERALL LENGTH
I/S - INSIDE
O/S - OUTSIDE
Ø - DIAMETER
° - DEGREE/S
TYP- TYPICAL
℄ - CENTER LINE
NTS - NOT TO SCALE

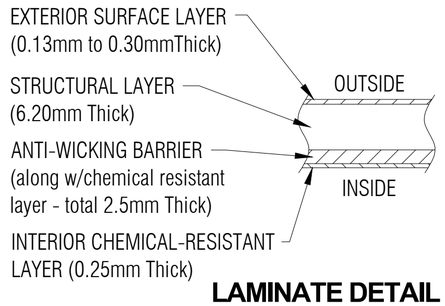

LAMINATE DETAIL E

NTS

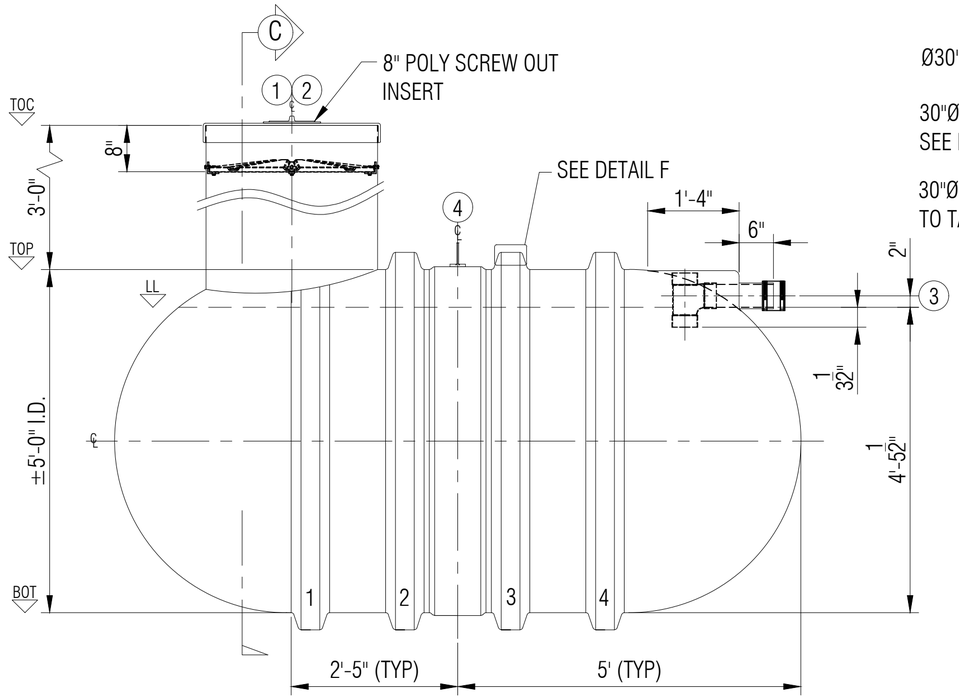

ELEVATION A

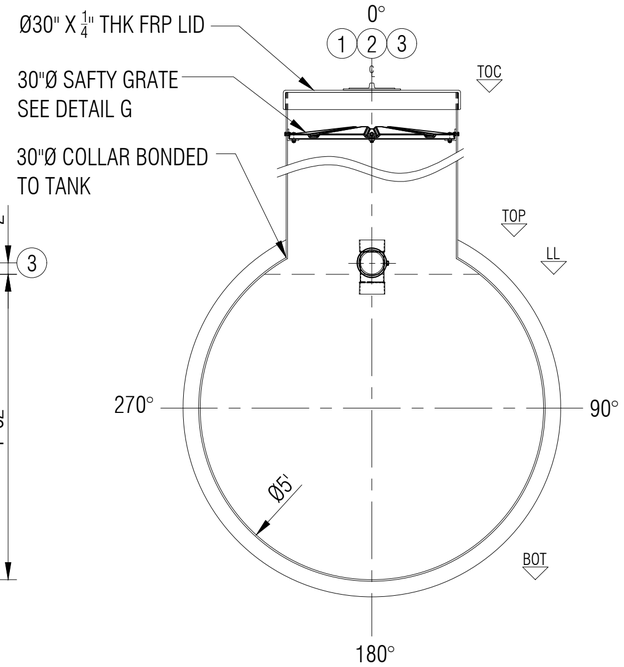

SECTION C

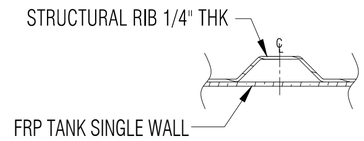

RIB LAMINATE DETAIL F

NTS

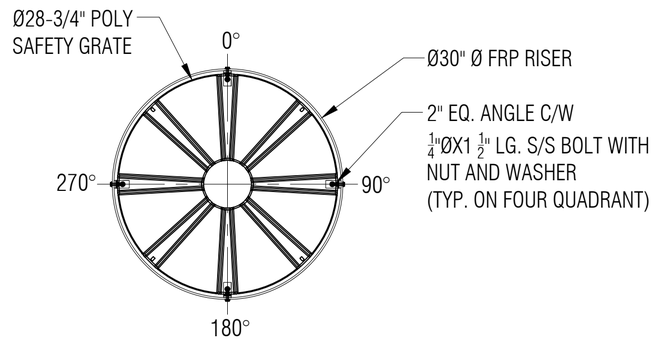

5 SAFETY GRATE DETAIL G

SCALE: 1:15

GENERAL NOTES:
- CSA B66 CERTIFIED FRP SEWAGE HOLDING TANK.
- RATED FOR 12' OF BURIAL DEPTH AND NO TRAFFIC LOADING.
- ALL DRILLED HOLES FLANGES TO BE COATED WITH RESIN.
- SAFETY GRATE CAN WITHSTAND 91 KG. OF DEAD LOAD.
- DIMENSIONS SHOWN IN FEET INCHES FORMAT OTHERWISE NOTED.
- 1/2" FABRICATION TOLERANCE. DOES NOT APPLY TO LAMINATE THICKNESS.

ITEM#	QTY	PART LIST	DESCRIPTION
1	1	30" CAP LID W/ 8"D POLY SCREW OUT INSERT	FPR LID
2	1	30"Ø MANWAY COLLAR	30"Ø FRP MANWAY
3	1	4"Ø PVC DWV STUB PIPE WITH INTERNAL TEEWYE AND FERNCO	INLET
4	1	MID STEEL	LIFT LUG
5	1	POLYETHYLENE SAFETY GRATE C/W HARDWARE	SAFETY GRATE
6			
7			

SHELL THICKNESS:	0.346"	DRAWN:	ATF
DOME HEAD THICKNESS:	0.351"	CHECKED:	
RIBS THICKNESS:	0.30" WITH 1 WR	DATE:	DEC 4, 2024
RIB SPACING:	16-1/2" CL TO CL	DESIGNED:	
WEIGHT:	283KG (625LBS)	APPROVED:	MPS
LENGTH:	3,048MM (10'-0")	MFG:	DS
WORKING CAPACITY:	4,434 L (975 IG/1,170 USG)	QA:	GA
OVERALL CAPACITY:	4,546 L (1,000 IG/1,200 USG)	SALES:	TA

CLIENT: FRP/MOCOAT FIBERGLASS LTD.

TITLE: **H1000-DB FRP SEWAGE HOLDING TANK**

FRPMOCOAT FIBERGLASS LTD.

SIZE	DRAWING NUMBER:		REVISION
C	H1000-DB		0
SCALE	WEIGHT:		SHEET
1:20	BURIAL DEPTH:	RATED 12'-0"	1/1

H1000-DB FRP SEWAGE HOLDING TANK