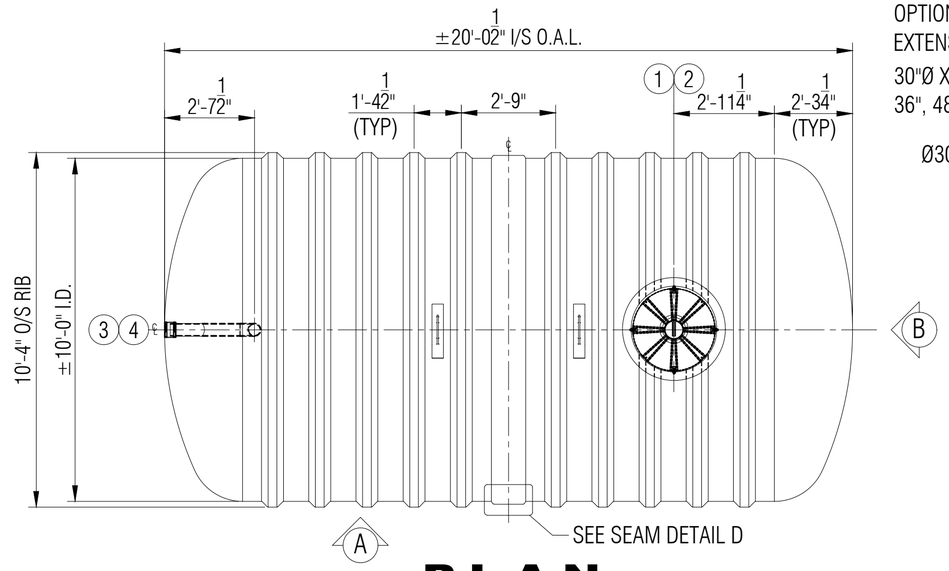


## PLAN

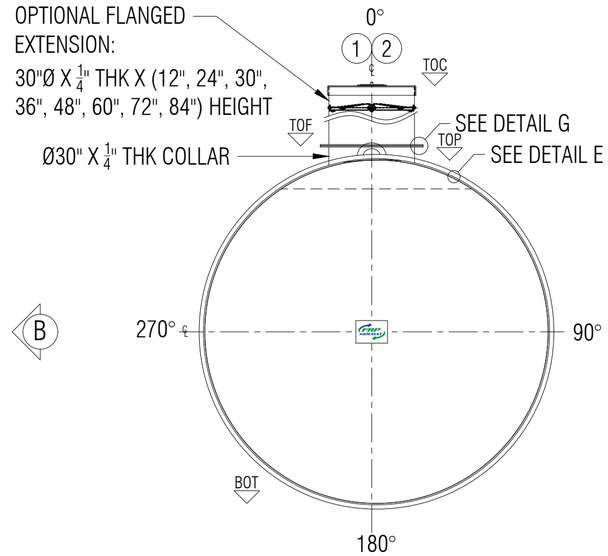


## ELEVATION B

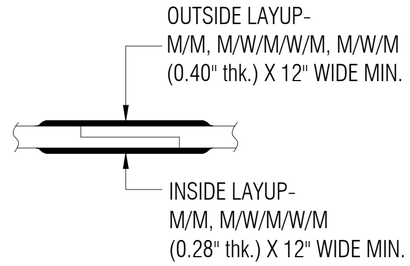


## TYPICAL BODY JOINT DETAIL D

NTS

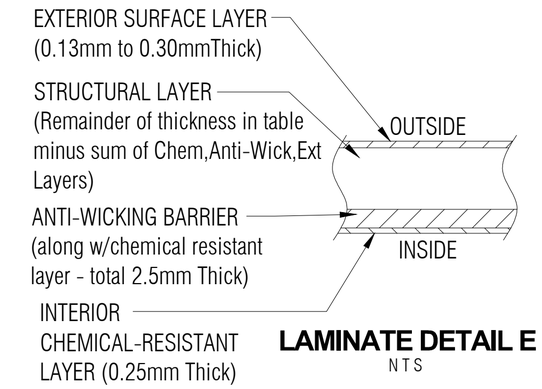


## LAMINATE DETAIL E

NTS

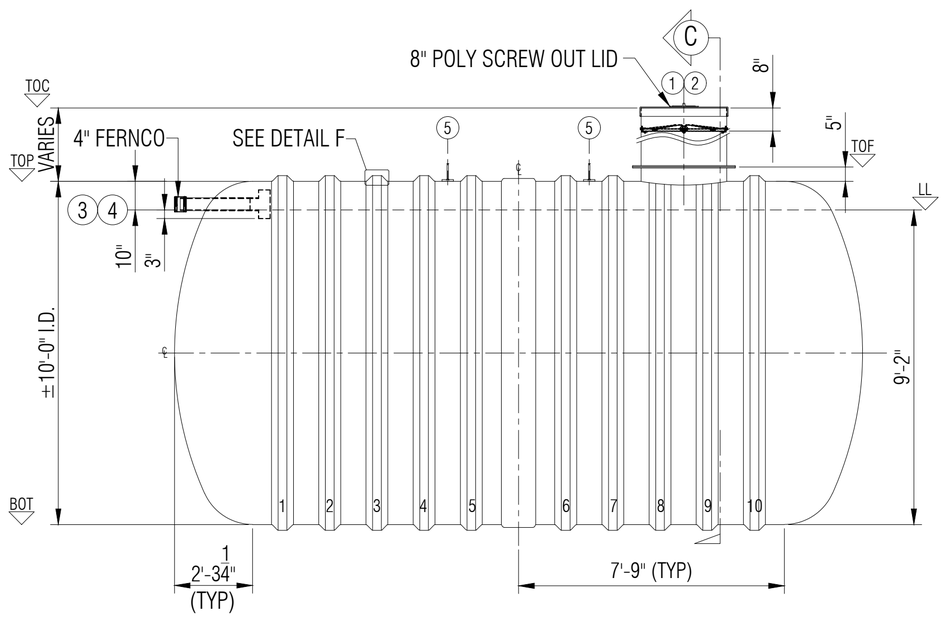


## ELEVATION A

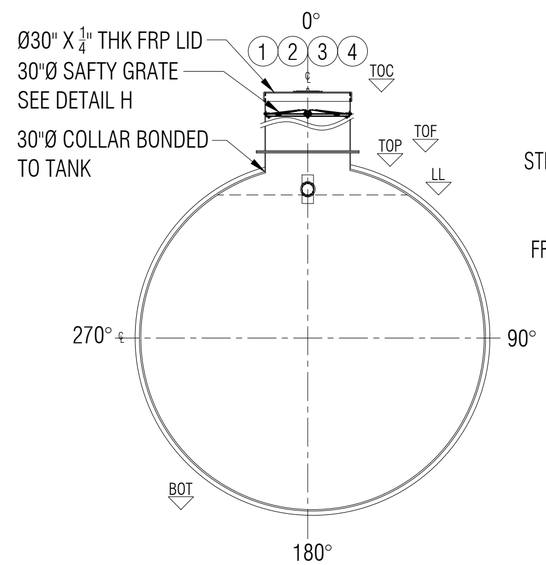


## SECTION C

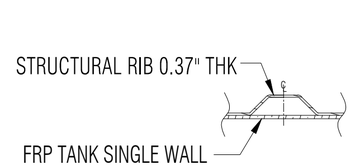


## RIB LAMINATE DETAIL F

NTS

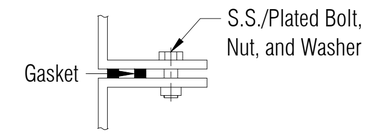


## FLANGE TO FLANGE CONNECTION DETAIL G

NTS

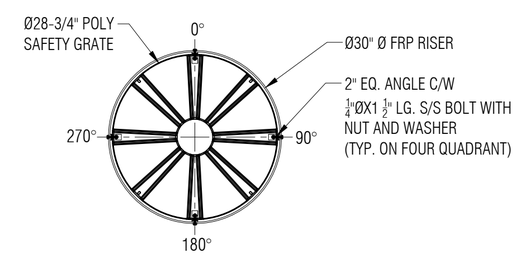


## 6 SAFETY GRATE DETAIL H

SCALE: 1:20

LEGEND:
TOC - TOP OF CAP LID
TOF - TOP OF FLANGE
TOP - TOP CYLINDER
BOT - BOTTOM CYLINDER
I/S - INSIDE
LL - LIQUID LEVEL
O.A.H.-OVERALL HEIGHT
O.A.L.-OVERALL LENGTH
I/S - INSIDE
O/S - OUTSIDE
Ø - DIAMETER
° - DEGREE/S
TYP- TYPICAL
℄ - CENTER LINE
NTS - NOT TO SCALE

GENERAL NOTES:
- CSA B66 CERTIFIED FRP TANK FOR SEWAGE HOLDING TANK.
- RATED FOR 7' OF BURIAL DEPTH AND NO TRAFFIC LOADING.
- ALL DRILLED HOLES FLANGES TO BE COATED WITH RESIN.
- SAFETY GRATE CAN WITHSTAND 91 KG. OF DEAD LOAD.
- DIMENSIONS SHOWN IN FEET INCHES FORMAT OTHERWISE NOTED.
- 1/2" FABRICATION TOLERANCE. DOES NOT APPLY TO LAMINATE THICKNESS.

| ITEM# | QTY | PART LIST | DESCRIPTION |
|---|---|---|---|
| 1 | 1 | 30" CAP LID W/ 8"D POLY SCREW OUT INSERT | FPR LID |
| 2 | 1 | 30"Ø MANWAY COLLAR | 30"Ø FRP COLLAR |
| 3 | 1 | 4" FERNCO | FLEXIBLE CONNECTOR |
| 4 | 1 | 4"Ø PVC PIPE & TEEWYE | INLET |
| 5 | 2 | MILD STEEL | LIFT LUGS |
| 6 | 1 | POLYETHYLENE SAFETY GRATE C/W HARDWARE | SAFETY GRATE |

| | |
|---|---|
| SHELL THICKNESS: | 0.400" |
| DISH HEAD THICKNESS: | 0.940" |
| RIBS THICKNESS: | 0.25" |
| RIB SPACING: | 16-1/2" (CL to CL) |
| LENGTH: | 6,109MM (20'-0 1/2") |
| WORKING CAPACITY: | 39,891 L (8,775 IG/10,538 USG) |
| OVERALL CAPACITY: | 40,960 L (9,010 IG/10,812 USG) |
| NUMBER OF RIBS: | 10 |

| | |
|---|---|
| DRAWN: | ATF |
| CHECKED: | ATF/MPS |
| DATE: | JAN 10, 2025 |
| DESIGNED: | FRP |
| APPROVED: | MPS |
| MFG: | DS |
| PM: | GA |
| SALES: | TA |

CLIENT: FRP/MOCOAT FIBERGLASS LTD.

TITLE: **BX9000S FIBERGLASS HOLDING TANK**

**FRPMOCOAT** FIBERGLASS LTD.

| SIZE | DRAWING NUMBER: | REVISION |
|---|---|---|
| C | BX9000S | 0 |

| SCALE | WEIGHT: | 1,837 KG (4,050 LBS) | SHEET |
|---|---|---|---|
| 1:40 | BURIAL DEPTH: | RATED 7'-0" | 1/1 |

# BX9000S FIBERGLASS HOLDING TANK