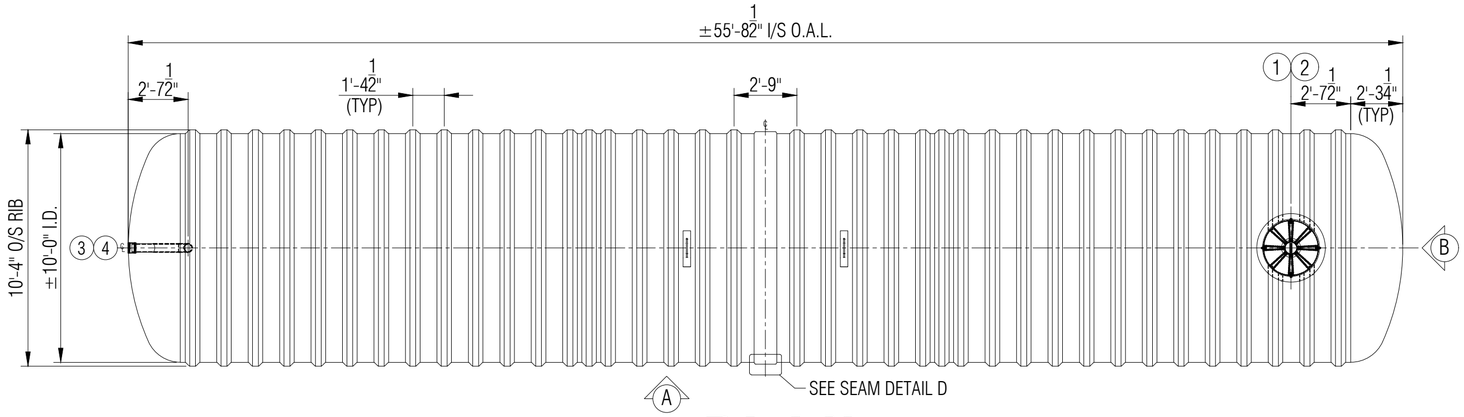

PLAN

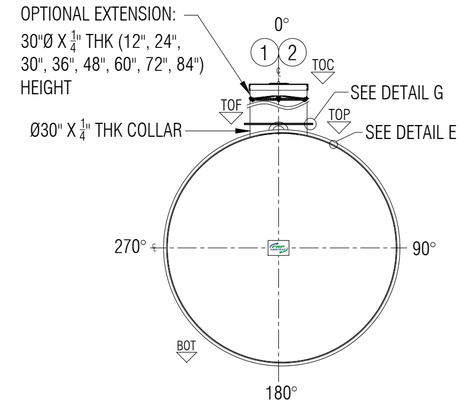

ELEVATION B

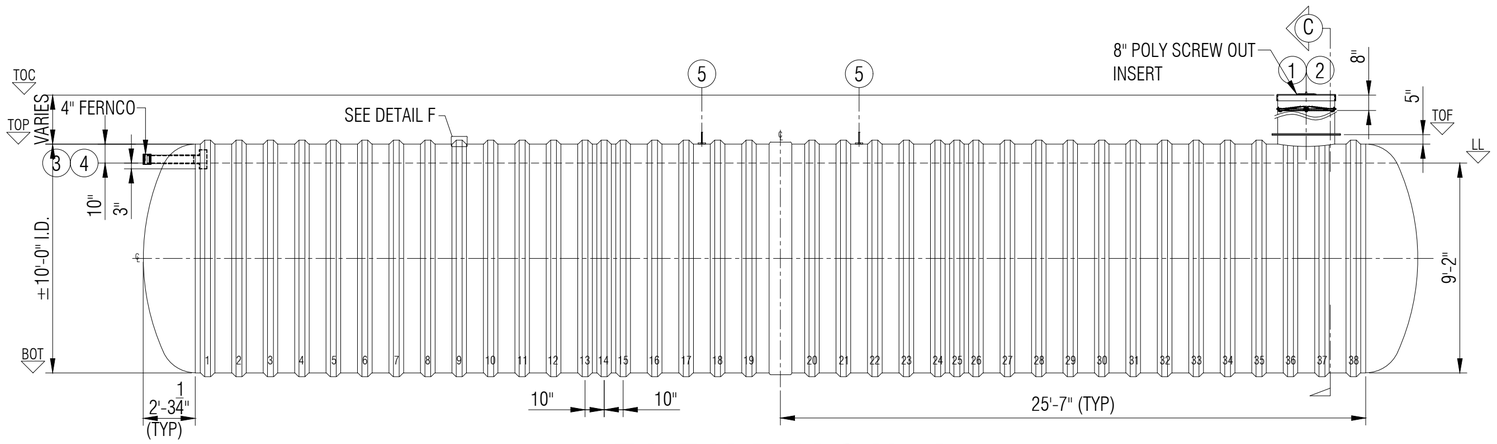

ELEVATION A

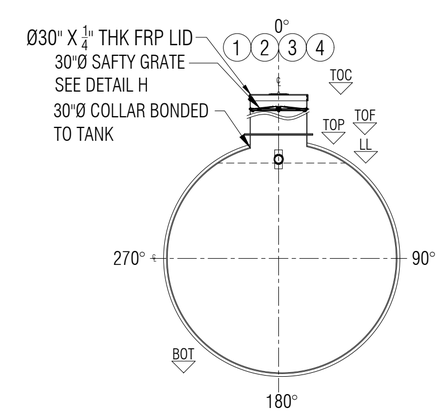

SECTION C

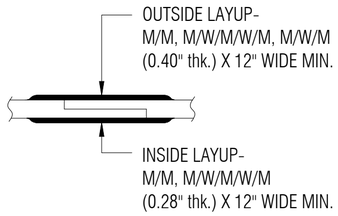

TYPICAL BODY JOINT DETAIL D
NTS

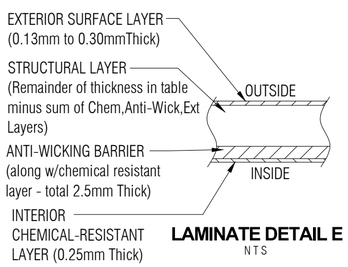

LAMINATE DETAIL E
NTS

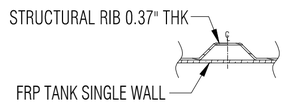

RIB LAMINATE DETAIL F
NTS

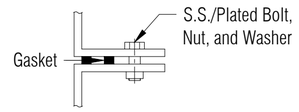

FLANGE TO FLANGE CONNECTION DETAIL G
NTS

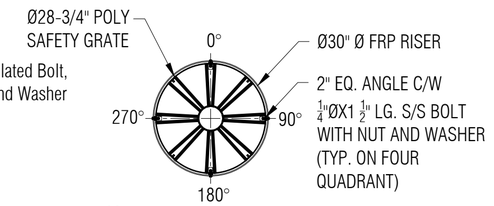

6 SAFETY GRATE DETAIL H
SCALE: 1:20

LEGEND:
TOC - TOP OF CAP LID
TOF - TOP OF FLANGE
TOP - TOP CYLINDER
BOT - BOTTOM CYLINDER
I/S - INSIDE
LL - LIQUID LEVEL
O.A.H.-OVERALL HEIGHT
O.A.L.-OVERALL LENGTH
I/S - INSIDE
O/S - OUTSIDE
Ø - DIAMETER
° - DEGREE/S
TYP- TYPICAL
℄ - CENTER LINE
NTS - NOT TO SCALE

GENERAL NOTES:
- CSA B66 CERTIFIED FRP TANK FOR WASTE WATER.
- RATED FOR 10' OF BURIAL DEPTH AND NO TRAFFIC LOADING.
- ALL DRILLED HOLES FLANGES TO BE COATED WITH RESIN.
- SAFETY GRATE CAN WITHSTAND 91 KG. OF DEAD LOAD.
- DIMENSIONS SHOWN IN FEET INCHES FORMAT OTHERWISE NOTED.
- 1/2" FABRICATION TOLERANCE. DOES NOT APPLY TO LAMINATE THICKNESS.

ITEM#	QTY	PART LIST	DESCRIPTION
1	1	30" CAP LID W/ 8"D POLY SCREW OUT INSERT	FPR LID
2	1	30"Ø MANWAY COLLAR	30"Ø FRP COLLAR
3	1	4" FERNCO	FLEXIBLE CONNECTOR
4	1	4"Ø PVC PIPE & TEEWYE	INLET
5	2	MILD STEEL	LIFT LUGS
6	1	POLYETHYLENE SAFETY GRATE C/W HARDWARE	SAFETY GRATE

SHELL THICKNESS:	0.475"
DISH HEAD THICKNESS:	1.030"
RIBS THICKNESS:	0.300"+2 WR (0.066")=.366"
RIB SPACING:	16-1/2" (CL to CL)
LENGTH:	16,980MM (55'-8 1/2")
WORKING CAPACITY:	115,600L (25,428IG/30,514USG)
OVERALL CAPACITY:	120,300 L (26,462IG/31,754 USG)
NUMBER OF RIBS:	38

DRAWN:	ATF
CHECKED:	ATF/MPS
DATE:	JAN 16, 2025
DESIGNED:	
APPROVED:	MPS
MFG:	DS
PM:	GA
SALES:	TA

CLIENT: FRP/MOCOAT FIBERGLASS LTD.
TITLE: **BX26000S-DB FIBERGLASS HOLDING TANK**

FRPMOCOAT
FIBERGLASS LTD.

SIZE	DRAWING NUMBER:		REVISION
C	BX26000S-DB		0
SCALE	WEIGHT:	4,837 KG (10,640 LBS)	SHEET
1:60	BURIAL DEPTH:	RATED 10'-0"	1/1

BX26000S-DB FIBERGLASS HOLDING TANK