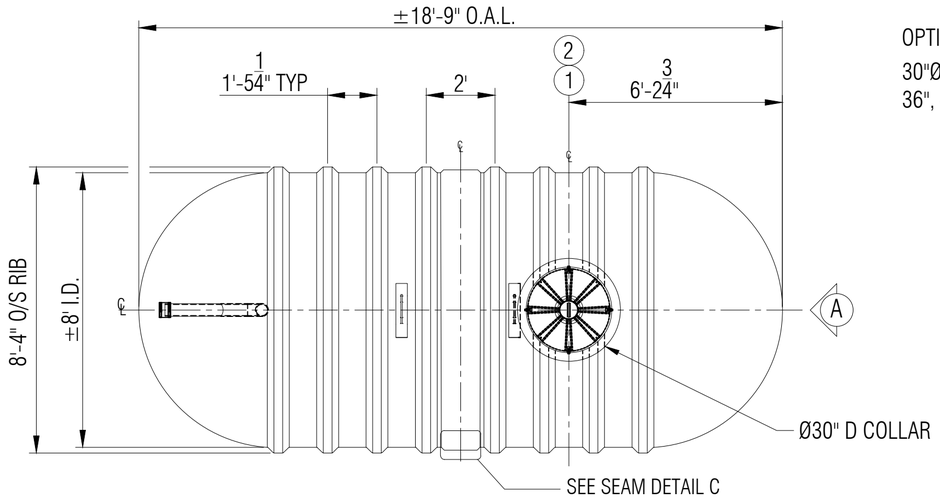

PLAN

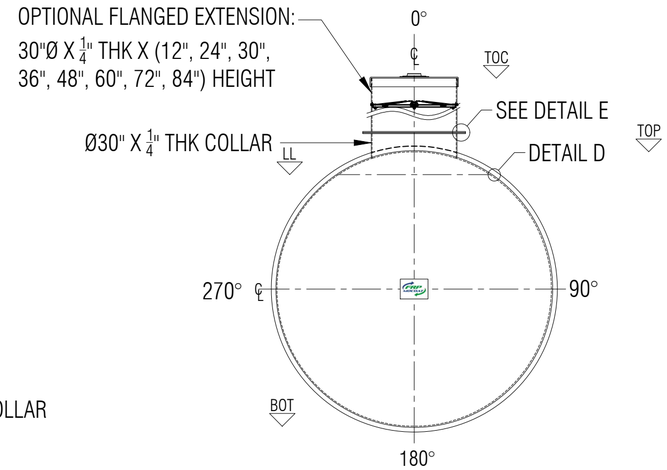

ELEVATION A

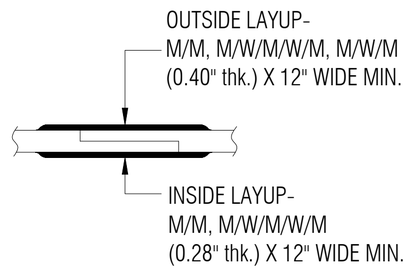

TYPICAL BODY JOINT DETAIL C

NTS

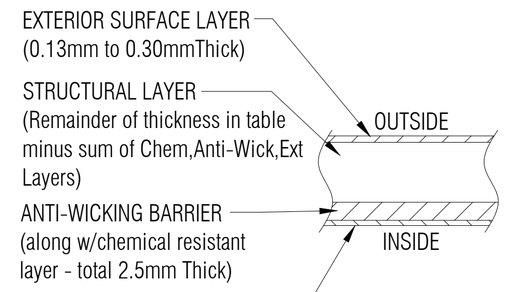

LAMINATE DETAIL D

NTS

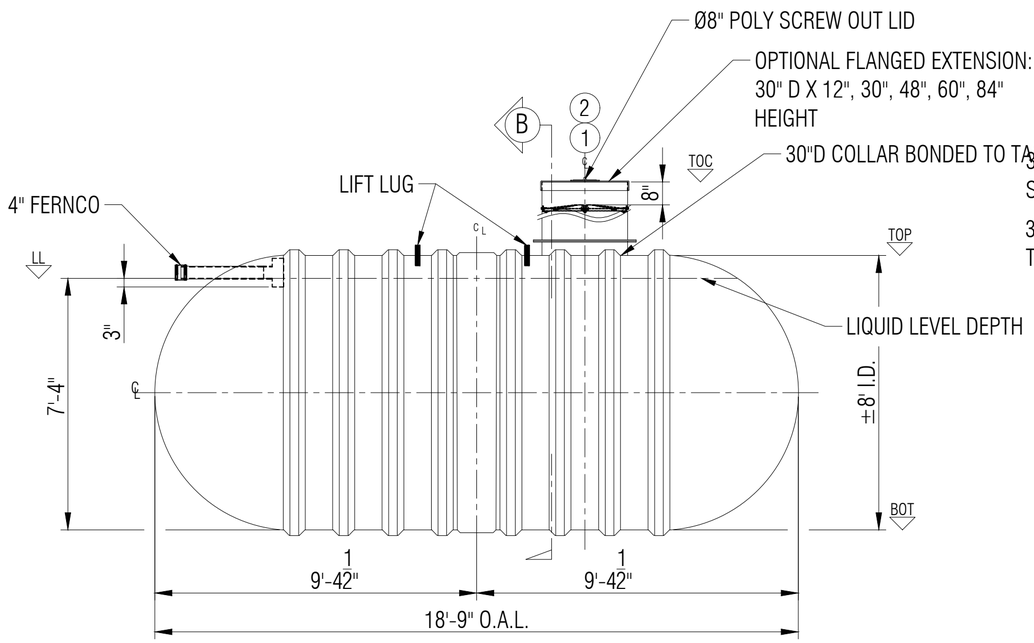

ELEVATION

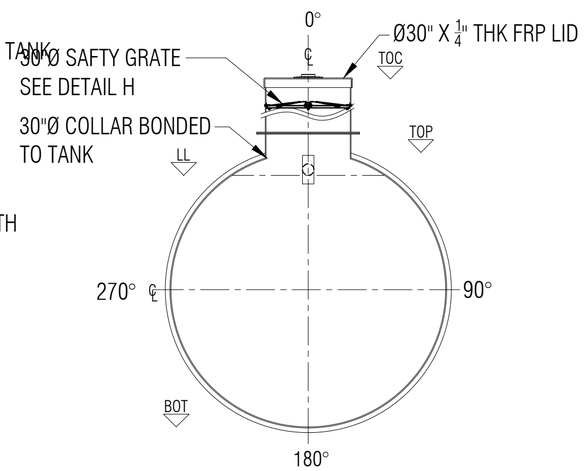

SECTION B

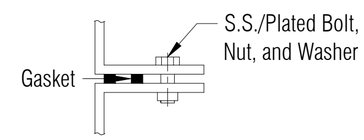

FLANGE TO FLANGE CONNECTION DETAIL E

NTS

RIB LAMINATE DETAIL F

NTS

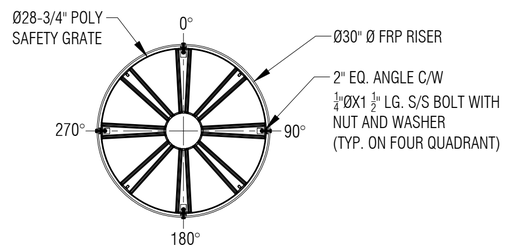

6 SAFETY GRATE DETAIL H

SCALE: 1:20

LEGEND:
TOC - TOP OF CAP LID
TOF - TOP OF FLANGE
TOP - TOP CYLINDER
BOT - BOTTOM CYLINDER
I/S - INSIDE
LL - LIQUID LEVEL
O.A.H.-OVERALL HEIGHT
O.A.L.-OVERALL LENGTH
I/S - INSIDE
O/S - OUTSIDE
Ø - DIAMETER
° - DEGREE/S
TYP- TYPICAL
℄ - CENTER LINE
NTS - NOT TO SCALE

GENERAL NOTES:
- CSA B66 CERTIFIED FRP TANK FOR SEWAGE HOLDING TANK.
- RATED FOR 7' OF BURIAL DEPTH AND NO TRAFFIC LOADING.
- ALL DRILLED HOLES FLANGES TO BE COATED WITH RESIN.
- SAFETY GRATE CAN WITHSTAND 91 KG. OF DEAD LOAD.
- DIMENSIONS SHOWN IN FEET INCHES FORMAT OTHERWISE NOTED.
- 1/2" FABRICATION TOLERANCE. DOES NOT APPLY TO LAMINATE THICKNESS.

ITEM#	QTY	PART LIST	DESCRIPTION
1	1	30" CAP LID W/ 8"D POLY SCREW OUT INSERT	
2	1	30"Ø MANWAY COLLAR	30"Ø FRP COLLAR
3	1	4" FERNCO	FLEXIBLE CONNECTOR
4	1	4"Ø PVC PIPE & TEEWYE	INLET
5	2	MILD STEEL	LIFT LUGS
6	1	POLYETHYLENE SAFETY GRATE C/W HARDWARE	SAFETY GRATE

SHELL THICKNESS:	0.375"
HEMI HEAD THICKNESS:	0.475"
RIBS THICKNESS:	0.25"
RIB SPACING:	17-1/4" (CL to CL)
LENGTH:	5,715MM (18'-9")
WORKING CAPACITY:	22,180L (4,879 IG/5,859USG)
OVERALL CAPACITY:	22,886 L (5,034 IG/6,040 USG)

DRAWN:	CCL/ATF
CHECKED:	ATF
DATE:	DEC 6, 2024
DESIGNED:	FRP
APPROVED:	MPS
MFG:	
PM:	
SALES:	

CLIENT: FRP/MOCOAT

TITLE: **B5000S FIBERGLASS HOLDING TANK**

FRPMOCOAT
FIBERGLASS LTD.

SIZE	DRAWING NUMBER:	REVISION
C	B5000S	0

SCALE	WEIGHT:	975 KG (2,150 LBS)	SHEET
1:40	BURIAL DEPTH:	RATED 7'-0"	1/1

B5000S FIBERGLASS HOLDING TANK