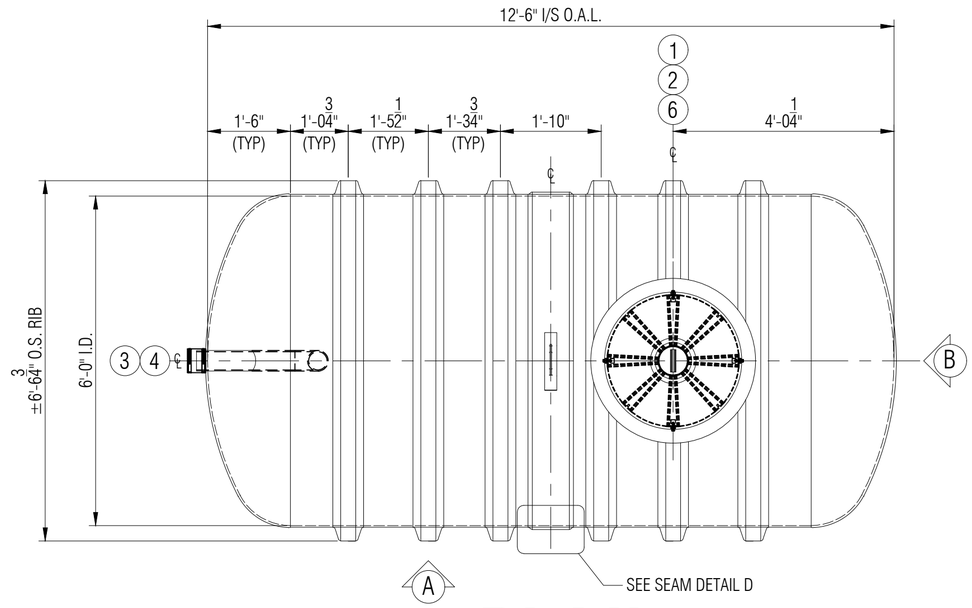


## PLAN

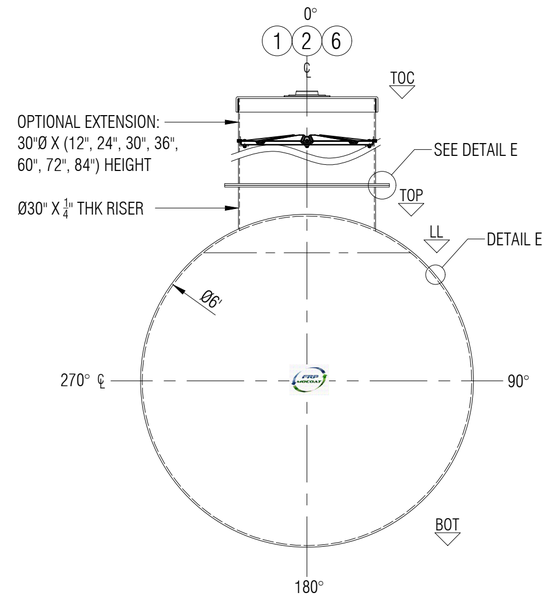


## ELEVATION "B"

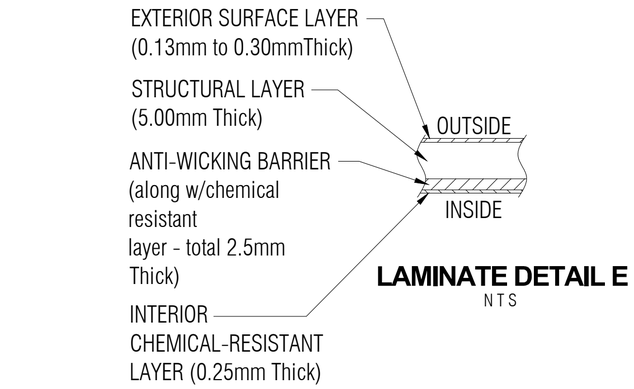


## LAMINATE DETAIL E

NTS

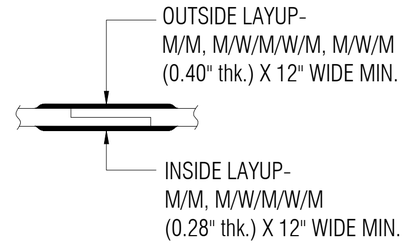


## TYPICAL BODY JOINT DETAIL D

NTS

LEGEND:
TOC - TOP OF CAP LID
TOF - TOP OF FLANGE
TOP - TOP CYLINDER
BOT - BOTTOM CYLINDER
I/S - INSIDE
LL - LIQUID LEVEL
O.A.H.-OVERALL HEIGHT
O.A.L.-OVERALL LENGTH
I/S - INSIDE
O/S - OUTSIDE
Ø - DIAMETER
° - DEGREE/S
TYP- TYPICAL
℄ - CENTER LINE
NTS - NOT TO SCALE

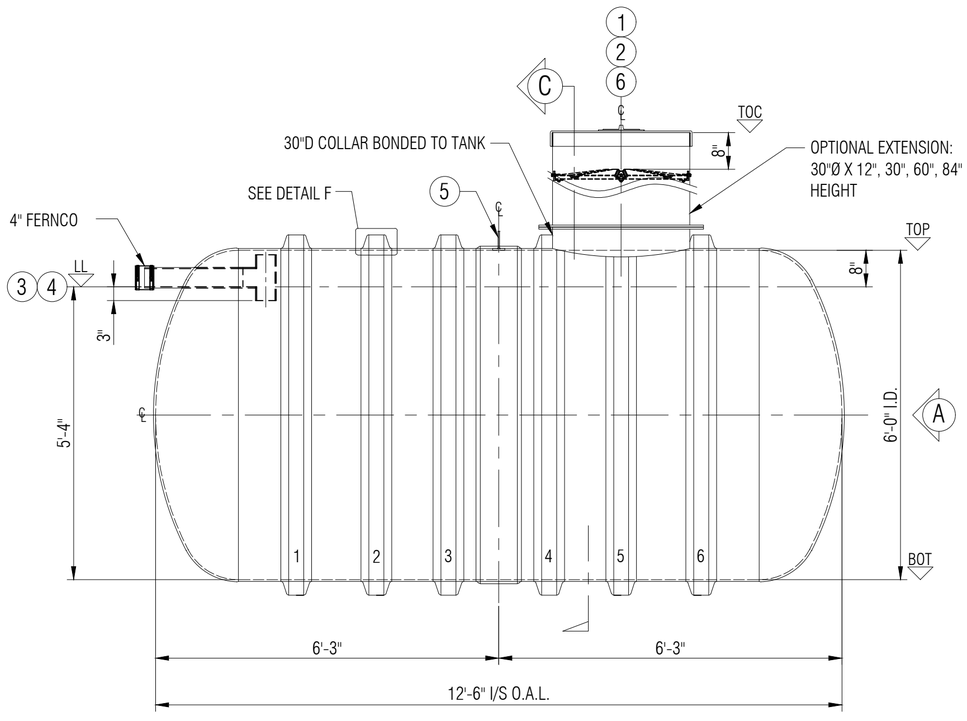


## ELEVATION "A"

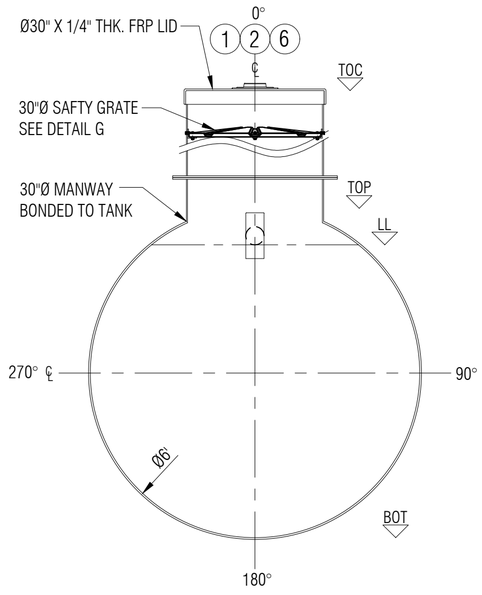


## SECTION "C"

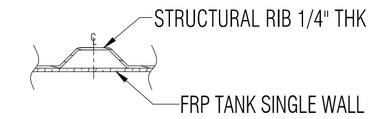


## RIB LAMINATE DETAIL F

NTS

-30

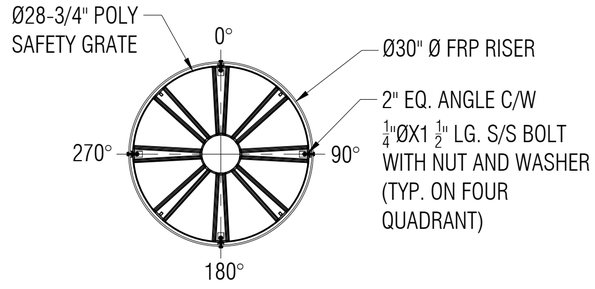


## 6 SAFETY GRATE DETAIL G

SCALE: 1:15

GENERAL NOTES:
- CSA B66 CERTIFIED FRP SEPTIC TANK.
- RATED FOR 7' OF BURIAL DEPTH AND NO TRAFFIC LOADING.
- ALL DRILLED HOLES FLANGES TO BE COATED WITH RESIN.
- SAFETY DEVISE CAN WITHSTAND 91 KG. OF DEAD LOAD.
- DIMENSIONS SHOWN IN FEET INCHES FORMAT OTHERWISE NOTED.
- 1/2" FABRICATION TOLERANCE. DOES NOT APPLY TO LAMINATE THICKNESS.

| ITEM# | QTY | PART LIST | DESCRIPTION |
|---|---|---|---|
| 1 | 1 | 30" CAP LID W/ 8"D POLY SCREW OUT INSERT | 30"Ø FRP MANWAY |
| 2 | 1 | 30"Ø MANWAY COLLAR | 30"Ø FRP COLLAR |
| 3 | 1 | 4" FERNCO | FLEXIBLE CONNECTOR |
| 4 | 1 | 4"Ø PVC PIPE & TEEWYE | INLET |
| 5 | 1 | MILD STEEL | LIFT LUG |
| 6 | 1 | POLYETHYLENE SAFETY GRATE C/W HARDWARE | SAFETY GRATE |

| | | | |
|---|---|---|---|
| SHELL THICKNESS: | 0.375" | DRAWN: | ATF |
| 2:1 HEAD THICKNESS: | 0.48" | CHECKED: | |
| RIBS THICKNESS: | 0.25" | DATE: | DEC. 21, 2023 |
| RIB SPACING: | 17 1/4" (CL to CL) | DESIGNED: | |
| LENGTH: | 3,810MM (12'-6") | APPROVED: | MPS |
| WORKING CAPACITY: | 8,274L (1,820 IG/2,186 USG) | MFG: | DS |
| OVERALL CAPACITY: | 9,092 L (2,000 IG/2,402 USG) | QA: | GA |
| | | SALES: | TA |

CLIENT: FRP/MOCOAT FIBERGLASS LTD.

TITLE: **B2000SLP UG SEWAGE HOLDING FRP TANK**

**FRPMOCOAT** FIBERGLASS LTD.

| SIZE | DRAWING NUMBER: | | REVISION |
|---|---|---|---|
| C | B2000SLP | | 0 |
| SCALE 1:25 | WEIGHT: | | SHEET 1/1 |
| | BURIAL DEPTH: | RATED 7'-0" | |

# B2000SLP SEWAGE HOLDING FRP TANK