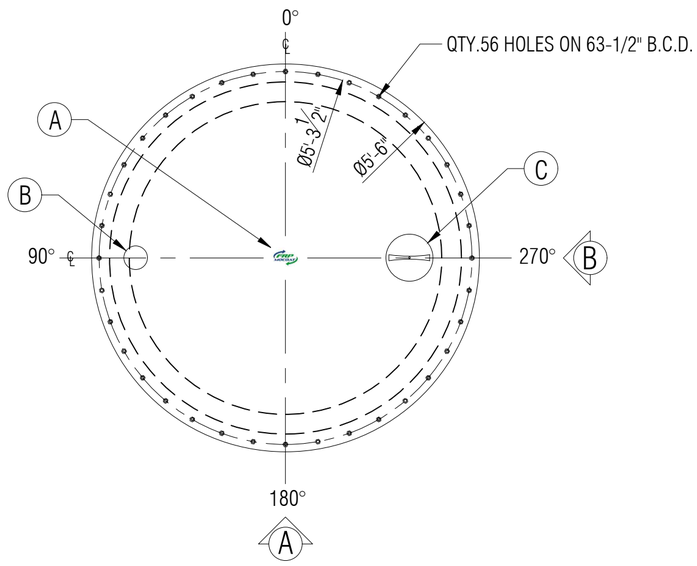

PLAN

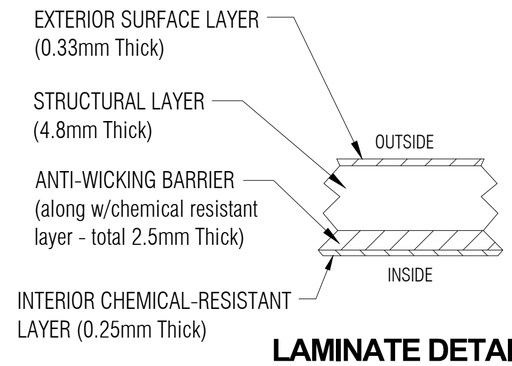

LAMINATE DETAIL 1

N T S

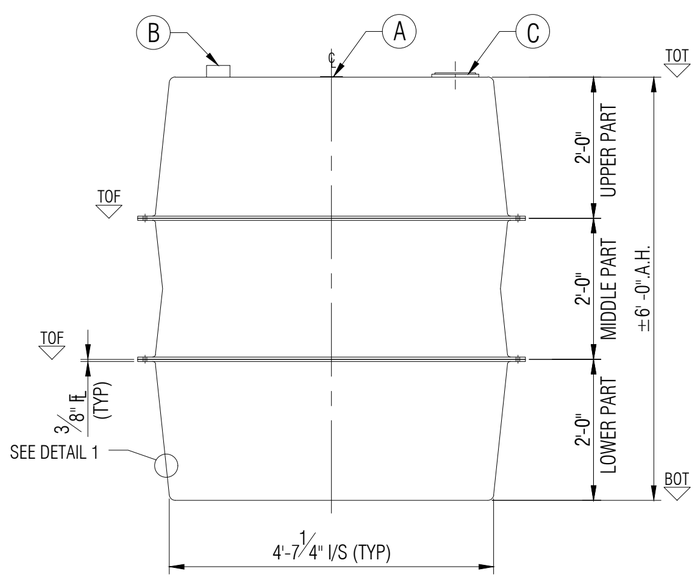

ELEVATION A

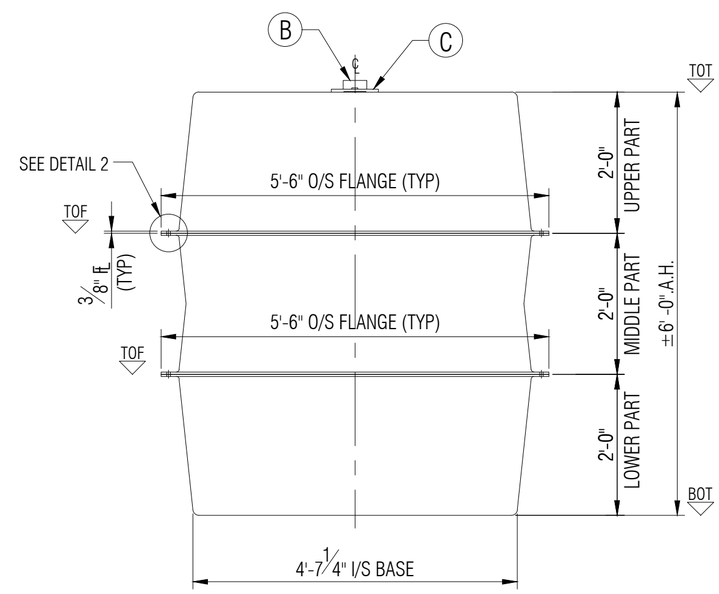

ELEVATION B

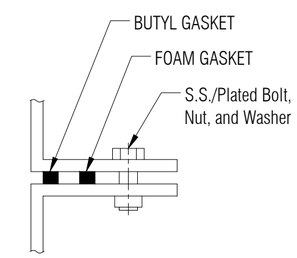

FLANGE TO FLANGE CONNECTION DETAIL 2

N T S

LEGEND:
TOL - TOP OF LID
TOF - TOP OF FLANGE
BCD - BOLT CENETR DIAMETER
BOT - BOTTOM OF TANK
I/S - INSIDE
O.A.H.-OVERALL HEIGHT
O.A.L.-OVERALL LENGTH
I/S - INSIDE
O/S - OUTSIDE
Ø - DIAMETER
° - DEGREE/S
TYP- TYPICAL
℄ - CENTER LINE
NTS - NOT TO SCALE

GENERAL NOTES:
- CSA B66 CERTIFIED SEWAGE HOLDING TANK.
- TANK COMES UNASSEMBLED FROM FACTORY.
- DIMENSIONS SHOWN IN FEET INCHES FORMAT OTHERWISE NOTED.
- 1/2" FABRICATION TOLERANCE. DOES NOT APPLY TO LAMINATE THICKNESS.

ITEM#	QTY	PART LIST/DESCRIPTION	APPROX. WEIGHT:	136KG (300LBS.)
A	1	NAMEPLATE	OVERALL CAPACITY:	3,410 L (750 IG/900 USG)
B	1	4"Ø PVC-DWV COUPLING - INLET		
C	1	8"Ø NON-VENTED POLY LID		
D				
E				
F				
G				

DRAWN:	ATF
CHECKED:	
DATE:	JAN 22, 2025
DESIGNED:	
APPROVED:	MPS
MFG:	DS
PM:	GA
SALES:	DG

CLIENT: FRP/MOCOAT FIBERGLASS LTD.

TITLE: **AGS750-RD SEWAGE HOLDING TANK**

FRPMOCOAT FIBERGLASS LTD.

SIZE	DRAWING NUMBER:	REVISION
C	AGS750-RD	0

SCALE	EST#:	SO#:	SHEET
1:20	PO#:	JOB#:	1/1

AGS750-RD SEWAGE HOLDING TANK