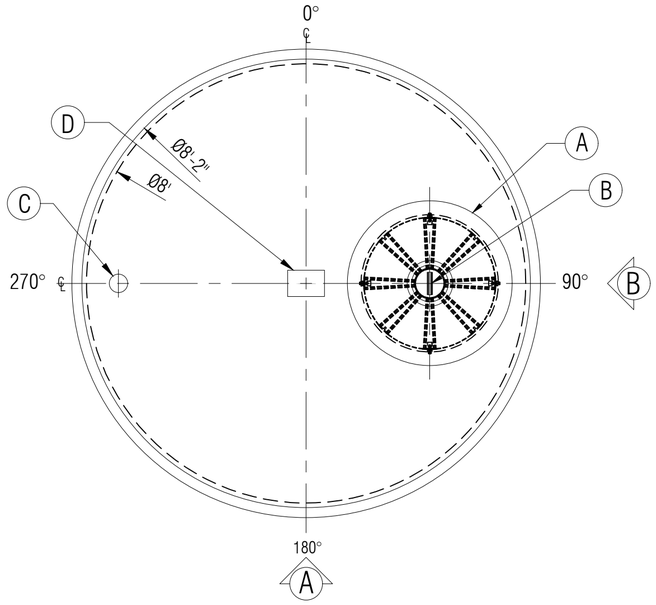

PLAN

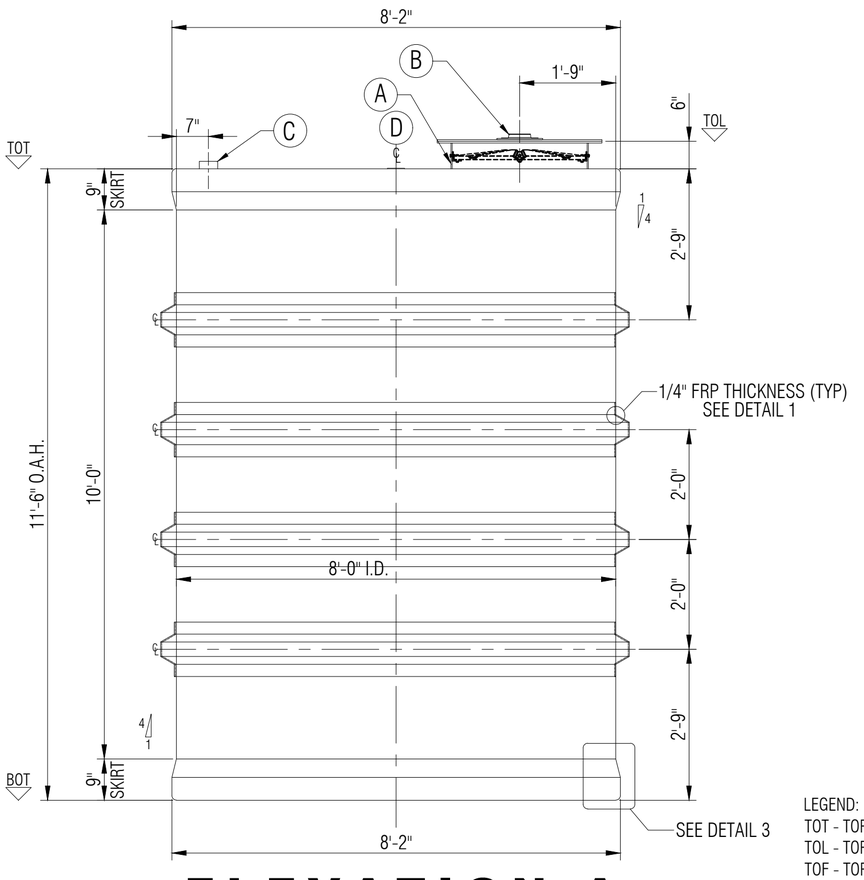

ELEVATION A

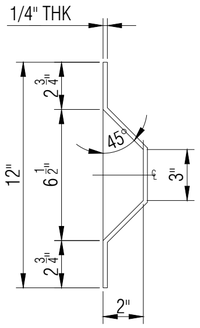

SHELL RIB DETAIL 4

NTS

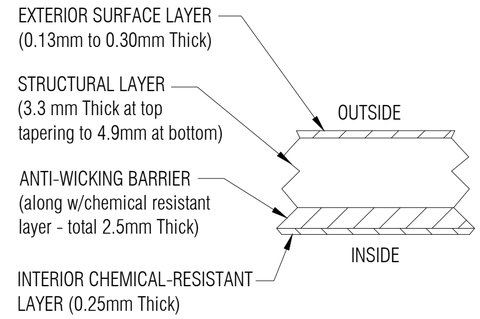

LAMINATE DETAIL 1

NTS

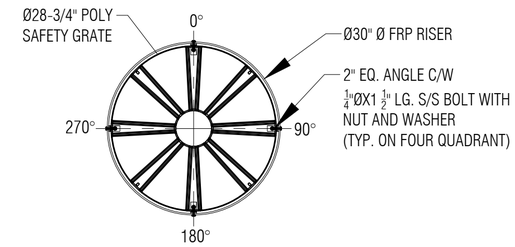

(E) SAFETY GRATE DETAIL 5

NTS

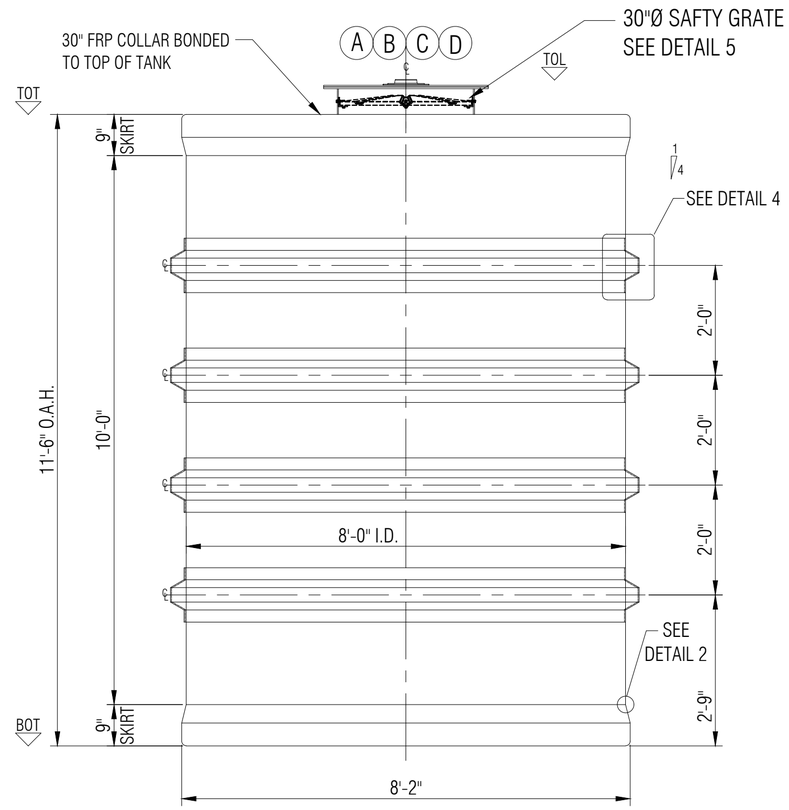

ELEVATION B

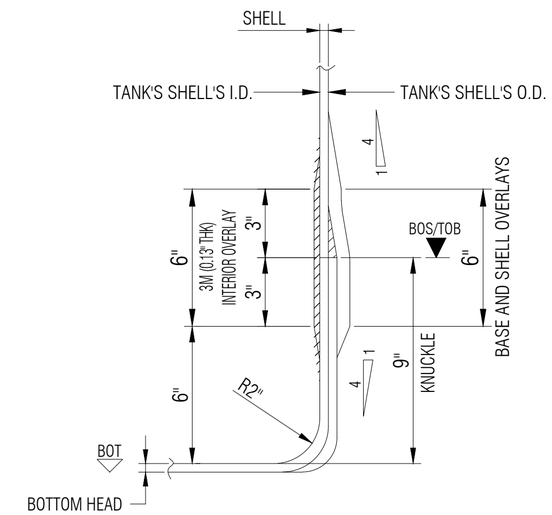

KNUCKLE/BASE/TOP/SHELL DETAIL 3

NTS

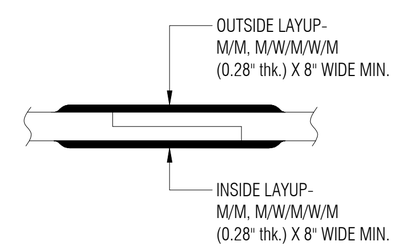

TYPICAL BODY JOINT DETAIL 2

NTS

GENERAL NOTES:
- CSA B66 CERTIFIED FOR SEWAGE.
- TANK COMES FULLY ASSEMBLED FROM FACTORY.
- TANK THICKNESS GRADUATES FROM 0.25" THK. AT THE TOP OF THE TANK TO 0.3125" AT THE BASE OF THE TANK.
- DIMENSIONS SHOWN IN FEET INCHES FORMAT OTHERWISE NOTED.
- 1/2" FABRICATION TOLERANCE. DOES NOT APPLY TO LAMINATE THICKNESS.

LEGEND:
TOT - TOP OF TANK
TOL - TOP OF LID
TOF - TOP OF FLANGE
BOT - BOTTOM OF TANK
I/S - INSIDE
O.A.H.-OVERALL HEIGHT
I/S - INSIDE
O/S - OUTSIDE
Ø - DIAMETER
° - DEGREE/S
TYP- TYPICAL
℄ - CENTER LINE
NTS - NOT TO SCALE

ITEM#	QTY	PART LIST/DESCRIPTION	APPROX. WEIGHT:	771KG (1,700LBS.)	DRAWN:	ATF
A	1	24"Ø ULTRA RIB ADAPTOR	OVERALL CAPACITY:	15,911L (3,500 IG/4,200 USG)	CHECKED:	
B	1	24"Ø FLAT LID W/ 22"Ø POLY NON-VENTED SCREWOUT LID			DATE:	JAN 24, 2025
C	1	4"Ø PVC-DWV COUPLING - INLET			DESIGNED:	
D	1	NAMEPLATE			APPROVED:	MPS
E	1	POLYETHYLENE SAFETY GRATE C/W HARDWARE			MFG:	DS
F					PM:	GA
G					SALES:	DG

CLIENT: FRP/MOCOAT FIBERGLASS LTD.

TITLE: **AGS3500-L SEWAGE STORAGE TANK**

FRPMOCOAT FIBERGLASS LTD.

SIZE	DRAWING NUMBER:	REVISION
C	AGS3500-L	0

SCALE	EST#:	SO#:	SHEET
1:25	PO#:	JOB#:	1/1

AGS3500-L SEWAGE STORAGE TANK