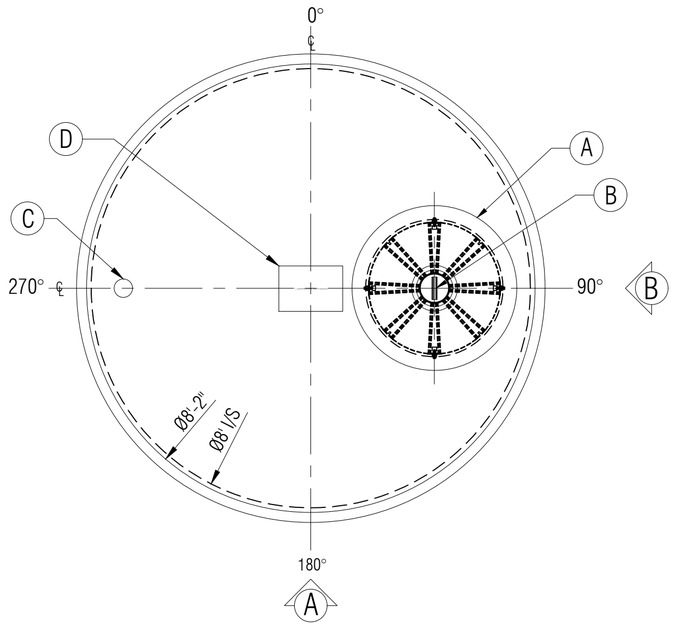

PLAN

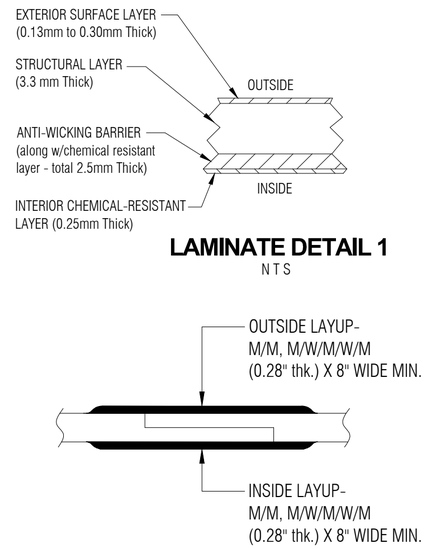

LAMINATE DETAIL 1

NTS

TYPICAL BODY JOINT DETAIL 2

NTS

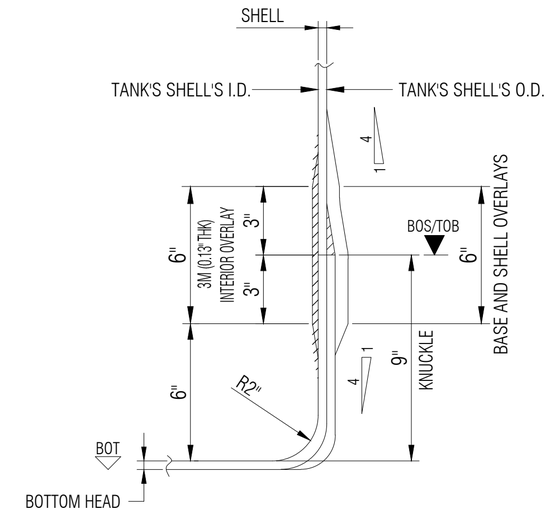

KNUCKLE/BASE/TOP/SHELL DETAIL 3

NTS

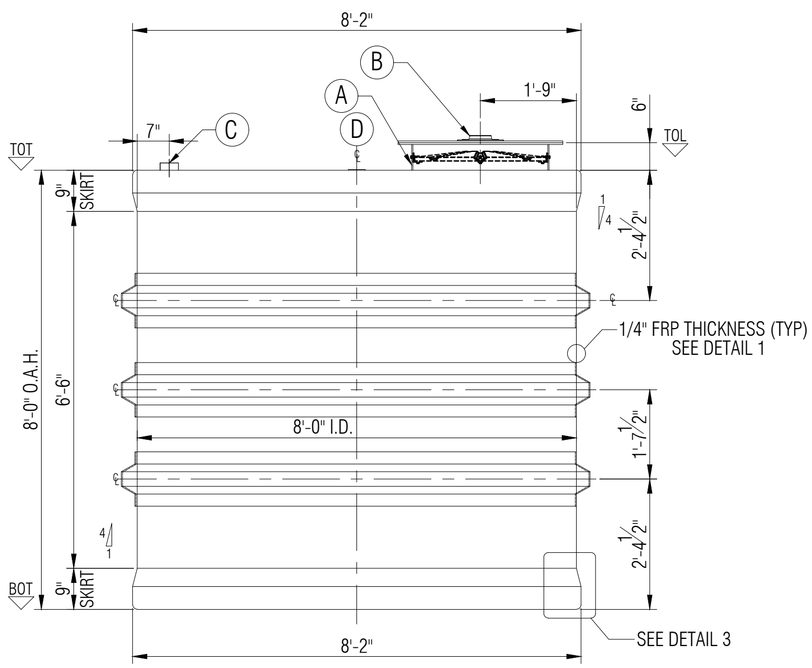

ELEVATION A

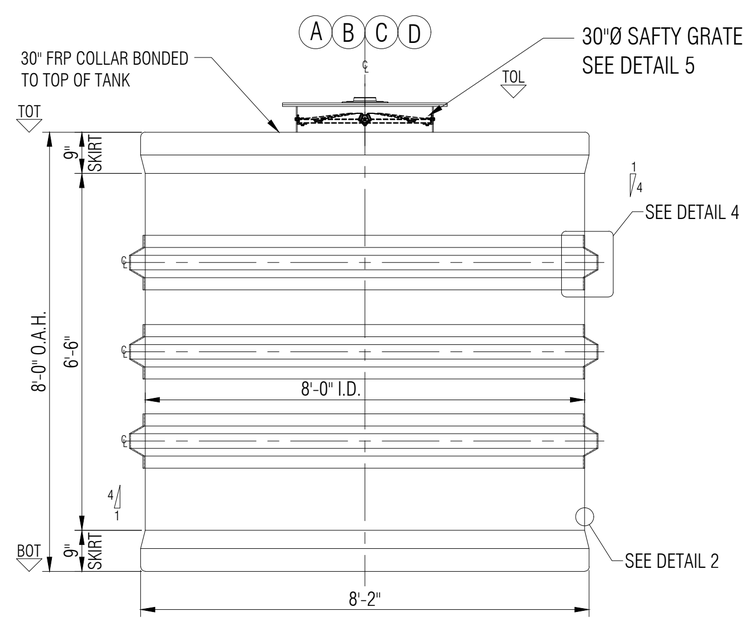

ELEVATION B

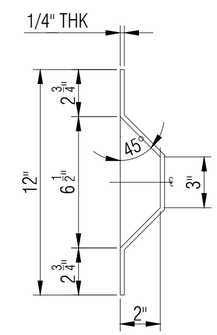

SHELL RIB DETAIL 4

NTS

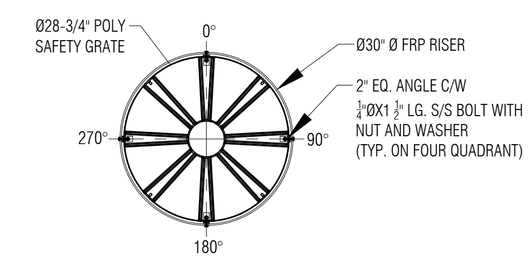

(E) SAFETY GRATE DETAIL 5

NTS

LEGEND:
TOT - TOP OF TANK
TOL - TOP OF LID
TOF - TOP OF FLANGE
BOT - BOTTOM OF TANK
I/S - INSIDE
O.A.H.-OVERALL HEIGHT
I/S - INSIDE
O/S - OUTSIDE
Ø - DIAMETER
° - DEGREE/S
TYP- TYPICAL
℄ - CENTER LINE
NTS - NOT TO SCALE

GENERAL NOTES:
- CSA B66 CERTIFIED FOR SEWAGE.
- ONE PIECE TANK.
- TANK THICKNESS IS 1/4" THK. FROM THE TOP TO THE BASE OF THE TANK.
- DIMENSIONS SHOWN IN FEET INCHES FORMAT OTHERWISE NOTED.
- 1/2" FABRICATION TOLERANCE. DOES NOT APPLY TO LAMINATE THICKNESS.

ITEM#	QTY	PART LIST/DESCRIPTION
A	1	24"Ø ULTRA RIB ADAPTOR
B	1	24"Ø FLAT LID W/ 22"Ø POLY NON-VENTED SCREWOUT LID
C	1	4"Ø PVC-DWV COUPLING - INLET
D	1	NAMEPLATE
E	1	POLYETHYLENE SAFETY GRATE C/W HARDWARE
F		
G		

APPROX. WEIGHT:	619KG (1,375LBS.)	DRAWN:	ATF
OVERALL CAPACITY:	11,366 L (2,500 IG/3,000 USG)	CHECKED:	
		DATE:	JAN 23, 2025
		DESIGNED:	
		APPROVED:	MPS
		MFG:	DS
		PM:	GA
		SALES:	DG

CLIENT: FRP/MOCOAT FIBERGLASS LTD.

TITLE: **AGS2500-L SEWAGE STORAGE TANK**

FRPMOCOAT FIBERGLASS LTD.

SIZE	DRAWING NUMBER:	REVISION
C	AGS2500-L	0

SCALE	EST#:	SO#:	SHEET
1:25	PO#:	JOB#:	1/1

AGS2500-L SEWAGE STORAGE TANK