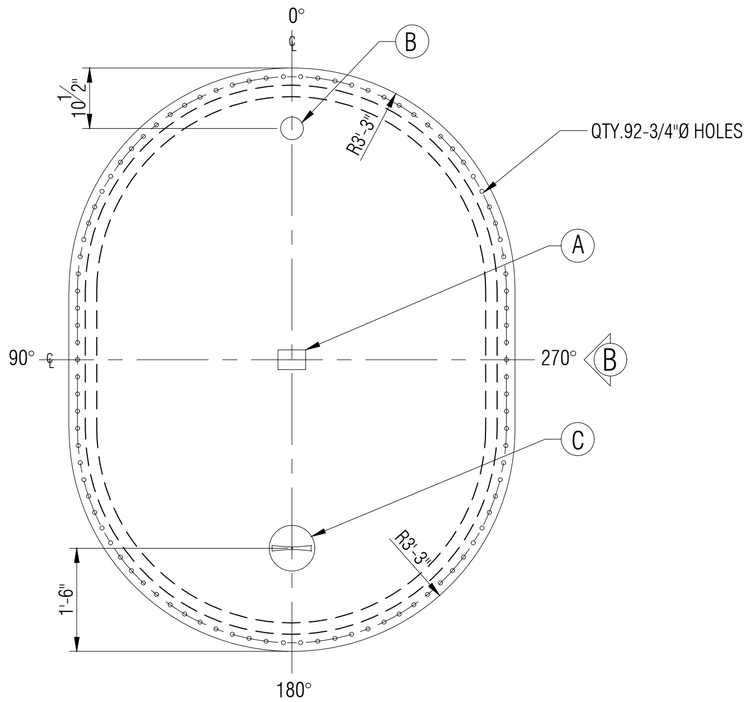

PLAN

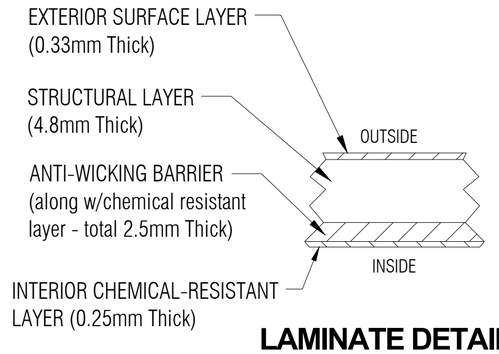

LAMINATE DETAIL 1

N T S

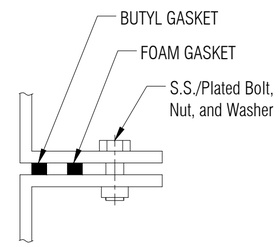

FLANGE TO FLANGE CONNECTION DETAIL 2

N T S

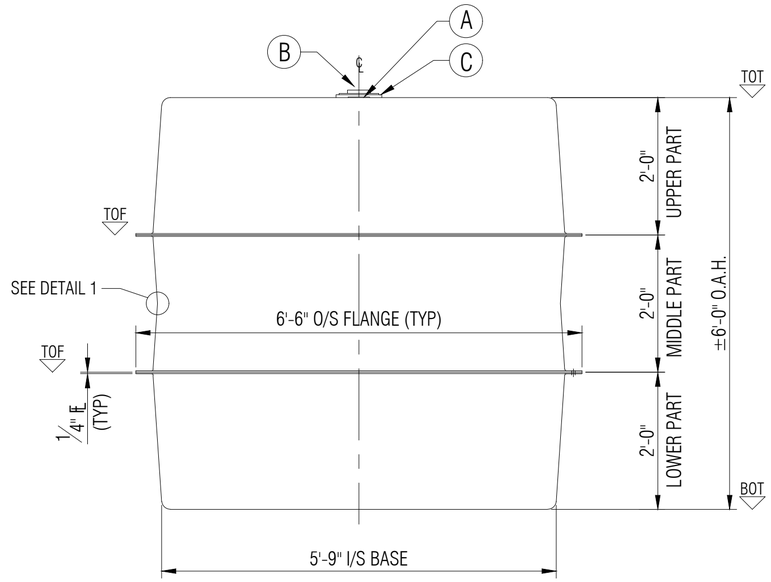

ELEVATION A

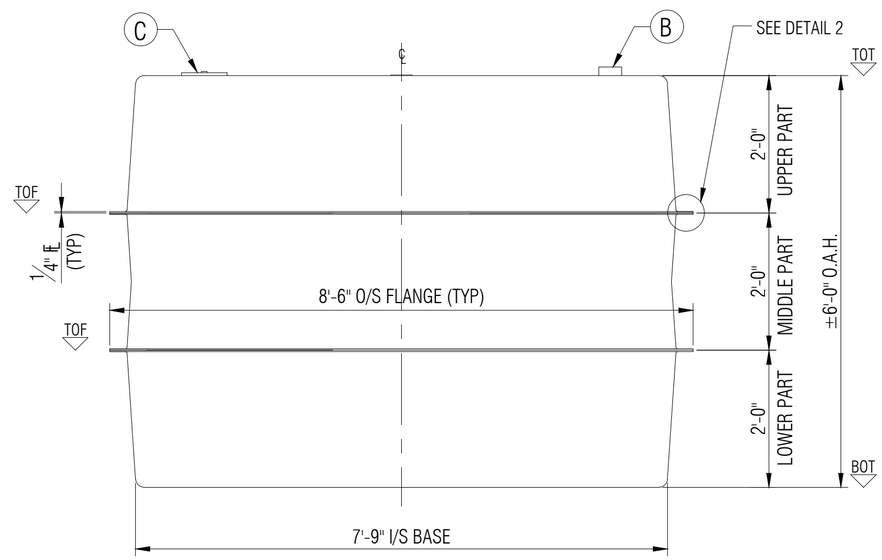

ELEVATION B

LEGEND:
TOT - TOP OF TANK
TOF - TOP OF FLANGE
BCD - BOLT CENETR DIAMETER
BOT - BOTTOM OF TANK
I/S - INSIDE
O.A.H.-OVERALL HEIGHT
O.A.L.-OVERALL LENGTH
I/S - INSIDE
O/S - OUTSIDE
Ø - DIAMETER
° - DEGREE/S
TYP- TYPICAL
℄ - CENTER LINE
NTS - NOT TO SCALE

GENERAL NOTES:
- CSA B66 CERTIFIED FOR SEWAGE STORAGE TANK.
- TANK COMES UNASSEMBLED FROM FACTORY.
- DIMENSIONS SHOWN IN FEET INCHES FORMAT OTHERWISE NOTED.
- 1/2" FABRICATION TOLERANCE. DOES NOT APPLY TO LAMINATE THICKNESS.

ITEM#	QTY	PART LIST/DESCRIPTION	APPROX. WEIGHT:	239KG (525LBS.)	DRAWN:	ATF
A	1	NAMEPLATE	OVERALL CAPACITY:	6,819 L (1,500 IG/1,800 USG)	CHECKED:	
B	1	4"Ø PVC-DWV COUPLING - INLET			DATE:	JAN. 24, 2024
C	1	8"Ø NON-VENTED POLY LID			DESIGNED:	
D					APPROVED:	MPS
E					MFG:	DS
F					PM:	GA
G					SALES:	DG

CLIENT: FRP/MOCOAT FIBERGLASS LTD.

TITLE: **AGS-1500-OV SEWAGE STORAGE TANK**

FRPMOCOAT FIBERGLASS LTD.

SIZE	DRAWING NUMBER:	REVISION
C	AGS-1500-OV	0

SCALE	EST#:	SO#:	SHEET
1:20	PO#:	JOB#:	1/1

AGS-1500-OV SEWAGE STORAGE TANK