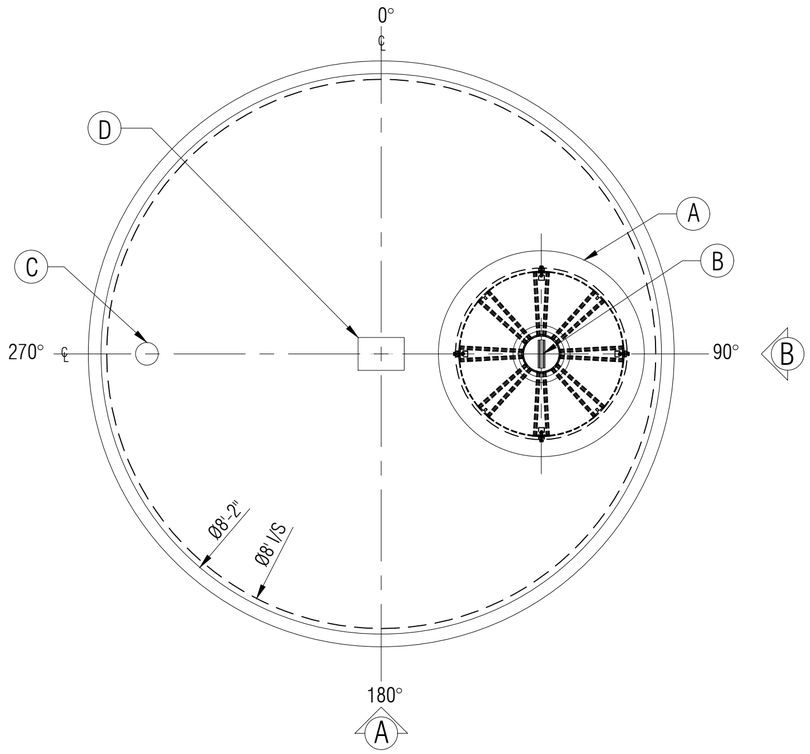

PLAN

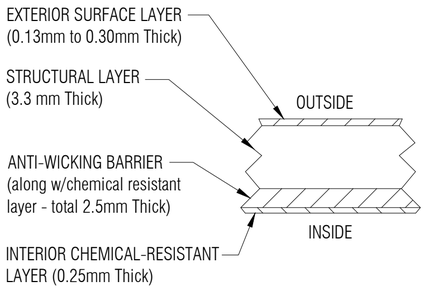

LAMINATE DETAIL 1

N T S

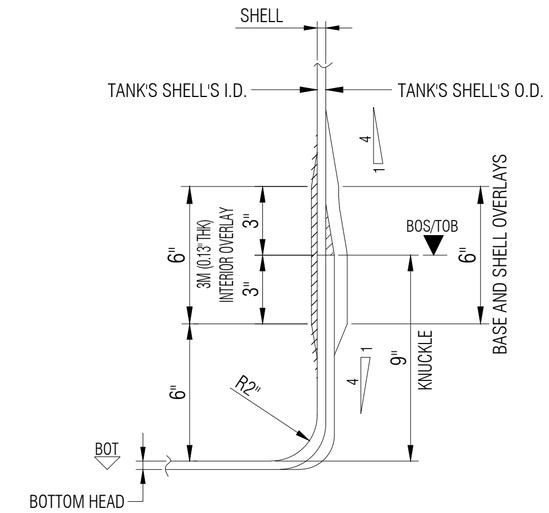

KNUCKLE/BASE/TOP/SHELL DETAIL 3

N T S

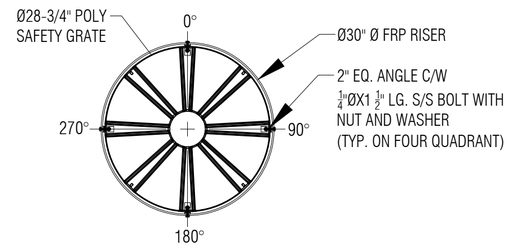

(E) SAFETY GRATE DETAIL 5

NTS

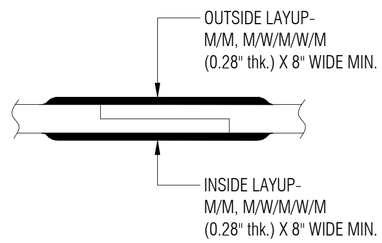

TYPICAL BODY JOINT DETAIL 2

N T S

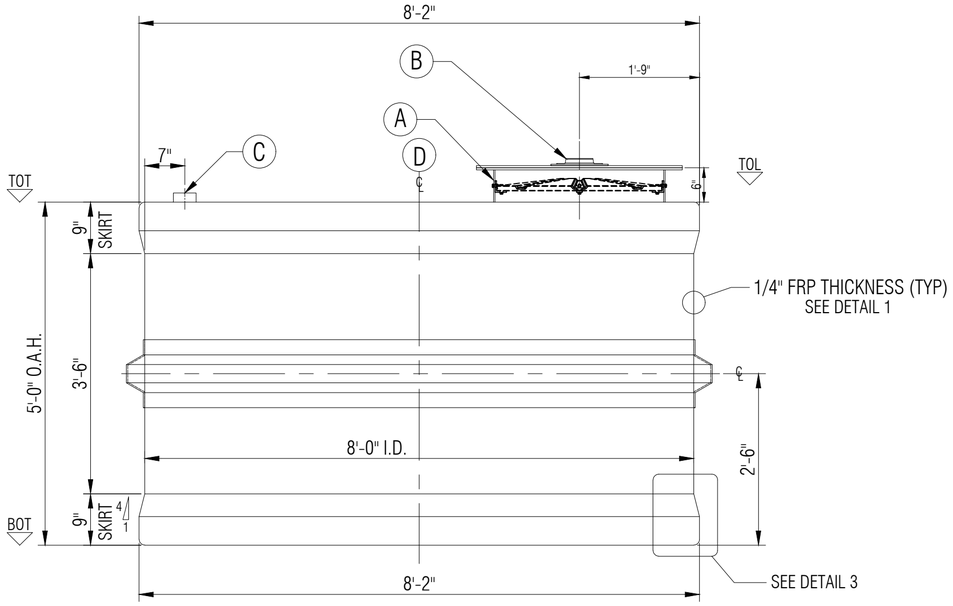

ELEVATION A

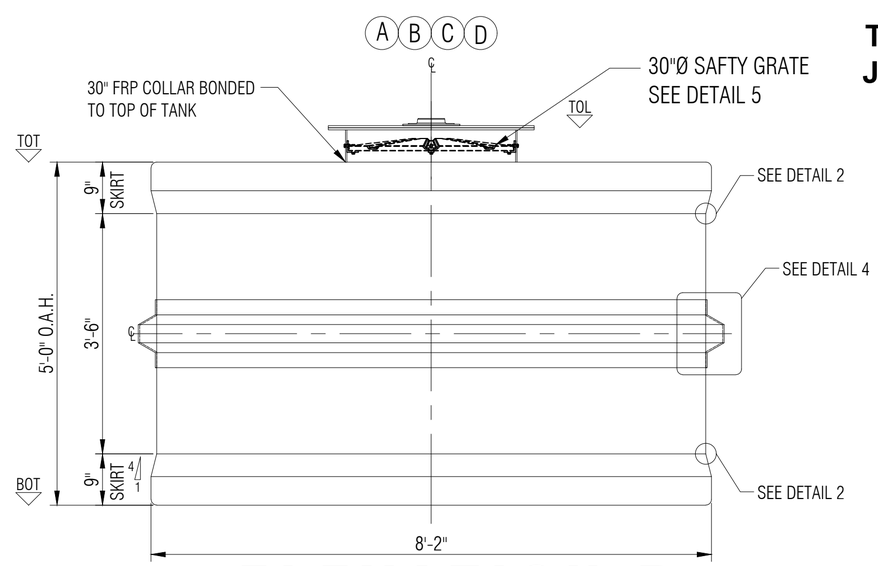

ELEVATION B

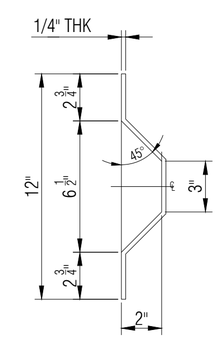

SHELL RIB DETAIL 4

N T S

LEGEND:
TOT - TOP OF TANK
TOL - TOP OF LID
TOF - TOP OF FLANGE
BOT - BOTTOM OF TANK
I/S - INSIDE
O.A.H.-OVERALL HEIGHT
I/S - INSIDE
O/S - OUTSIDE
Ø - DIAMETER
° - DEGREE/S
TYP- TYPICAL
℄ - CENTER LINE
NTS - NOT TO SCALE

GENERAL NOTES:
- CSA B66 CERTIFIED FOR SEWAGE.
- ONE PIECE TANK.
- TANK THICKNESS IS 1/4" THK. FROM THE TOP TO THE BASE OF THE TANK.
- DIMENSIONS SHOWN IN FEET INCHES FORMAT OTHERWISE NOTED.
- 1/2" FABRICATION TOLERANCE. DOES NOT APPLY TO LAMINATE THICKNESS.

ITEM#	QTY	PART LIST/DESCRIPTION
A	1	30"Ø FRP COLLAR
B	1	30" FRP LID WITH 8" NON-VENT SCREW OUT LID
C	1	4"Ø PVC-DWV COUPLING - INLET
D	1	NAMEPLATE
E	1	POLYETHYLENE SAFETY GRATE C/W HARDWARE
F		
G		

APPROX. WEIGHT:	476KG (1,050LBS.)
OVERALL CAPACITY:	6,820 L (1,500 IG/1,800 USG)
DRAWN:	ATF
CHECKED:	
DATE:	JAN 23, 2025
DESIGNED:	
APPROVED:	MPS
MFG:	DS
PM:	GA
SALES:	DG

CLIENT: FRP/MOCOAT FIBERGLASS LTD.

TITLE: **AGS1500-L SEWAGE STORAGE TANK**

FRPMOCOAT FIBERGLASS LTD.

SIZE	DRAWING NUMBER:	REVISION
C	AGS1500-L	0

SCALE	EST#:	SO#:	SHEET
1:20	PO#:	JOB#:	1/1

AGS1500-L SEWAGE STORAGE TANK