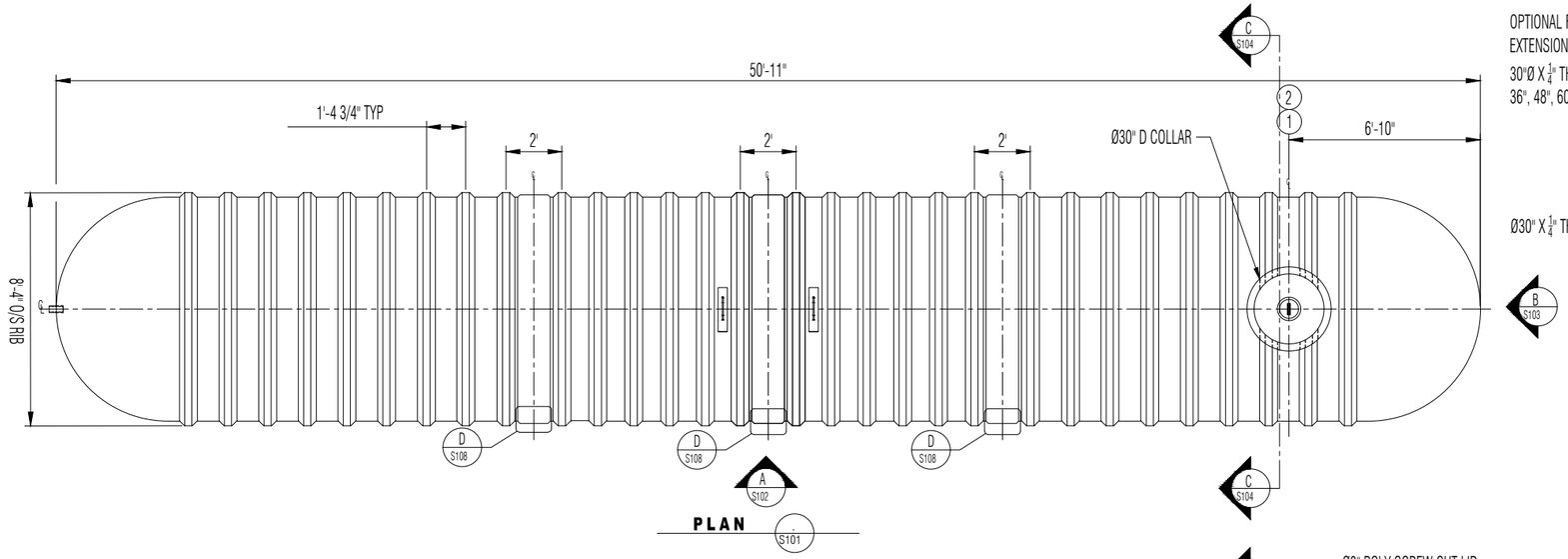

PLAN S101

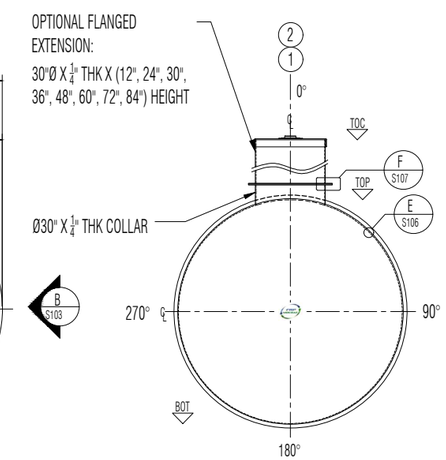

ELEVATION B S103

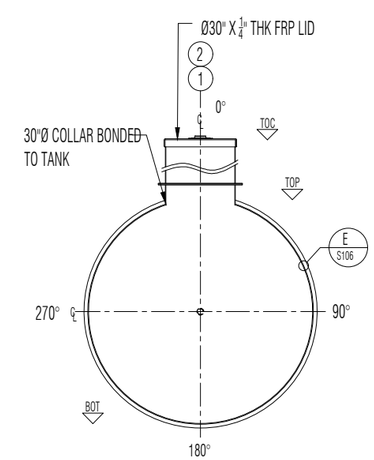

SECTION C S104

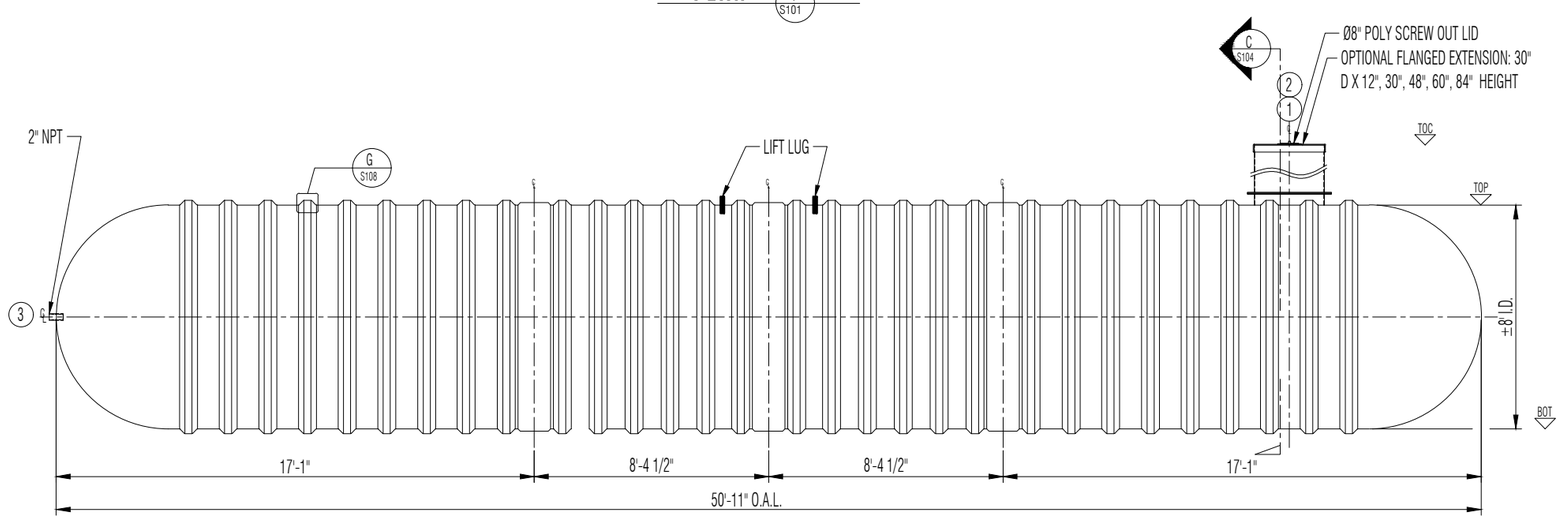

ELEVATION A S102

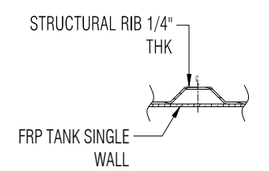

RIB LAMINATE DETAIL
DETAIL G S108
NTS

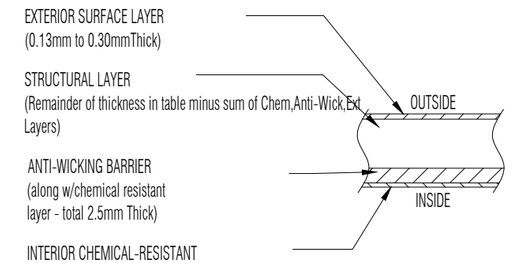

LAMINATE DETAIL
DETAIL E S106
NTS

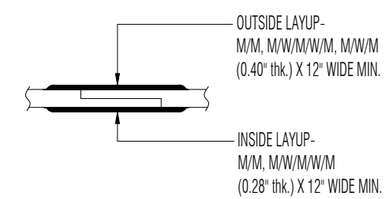

TYPICAL BODY JOINT DETAIL
DETAIL D S105
NTS

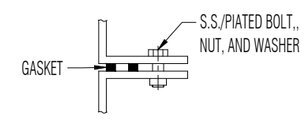

FLANGE TO FLANGE CONNECTION
DETAIL F S107
NTS

LEGEND:
TOC - TOP OF CAP LID
TOF - TOP OF FLANGE
TOP - TOP CYLINDER
BOT - BOTTOM CYLINDER
I/S - INSIDE
LL - LIQUID LEVEL
O.A.H.-OVERALL HEIGHT
O.A.L.-OVERALL LENGTH
I/S - INSIDE
O/S - OUTSIDE
Ø - DIAMETER
° - DEGREE/S
TYP- TYPICAL
℄ - CENTER LINE
NTS - NOT TO SCALE

GENERAL NOTES

- CSA ANSI / NSF 61 CERTIFIED FRP POTABLE WATER TANK.
- RATED FOR 7' OF BURIAL DEPTH AND NO TRAFFIC LOADING.
- ALL DRILLED HOLES FLANGES TO BE COATED WITH RESIN.
- DIMENSIONS SHOWN IN FEET INCHES FORMAT OTHERWISE NOTED.
- 1/2" FABRICATION TOLERANCE. DOES NOT APPLY TO LAMINATE THICKNESS.

ITEM#	QTY	PART LIST	DESCRIPTION
1	1	30"CAP LID W/ 8"D POLY SCREW OUT INSERT, VENTED	FRP LID
2	1	30" MANWAY COLLAR	30"Ø FRP MANWAY
3	1	2" FRP NPT CONNECTION	OUTLET
4	2	CARBON STEEL LIFT LUG	LIFT LUG
5			
6			
7			

SHELL THICKNESS:	0.500"	DRAWN:	EA
HEMI HEAD THICKNESS:	0.650"	CHECKED:	MPS
RIBS THICKNESS:	0.25"	DATE:	JUL. 27, 2026
RIB SPACING:	17 1/4" CL TO CL	DESIGNED:	FRP
WEIGHT:	3,357 KG (7,400 LBS)	APPROVED:	MPS
LENGTH:	15,532MM (50'-11")(47'-6")	MFG.:	TS
WORKING CAPACITY:	N/A	QA:	BR
OVERALL CAPACITY:	68,656L (15,102 IG/18,122 USG)	SALES:	DG

CLIENT: FRP/MOCOAT FIBERGLASS LTD.

TITLE: **B15000W FRP POTABLE WATER TANK**

FRPMOCOAT FIBERGLASS LTD.

SIZE:	DRAWING NUMBER:		REVISION:
B	B15000W		0
SCALE:	WEIGHT:	3,357 KG (7,400 LBS)	SHEET:
-	BURIAL DEPTH:	RATED 7'- 0"	1/1

B15000W FRP POTABLE WATER TANK