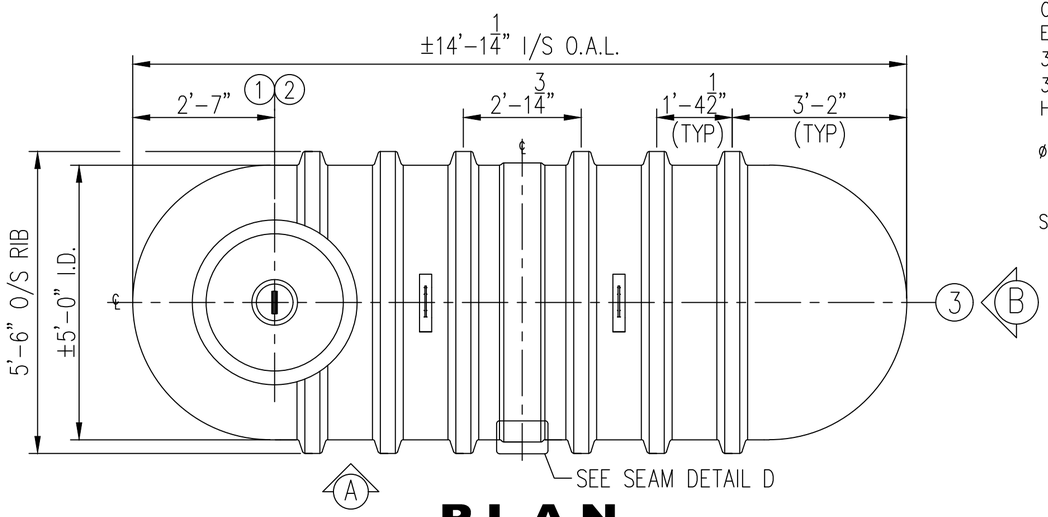

PLAN

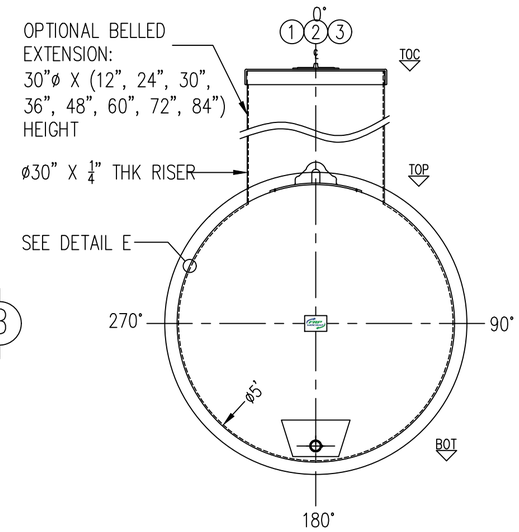

ELEVATION B

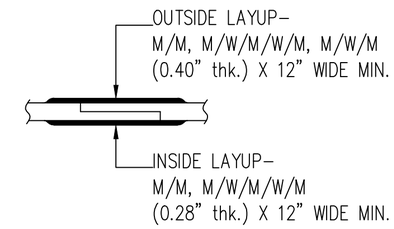

TYPICAL BODY JOINT DETAIL D

N T S

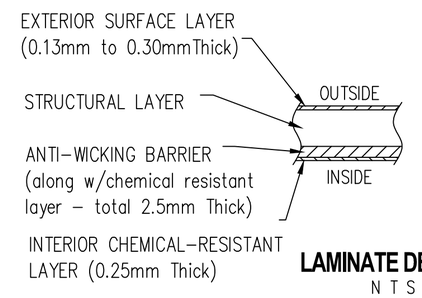

LAMINATE DETAIL E

N T S

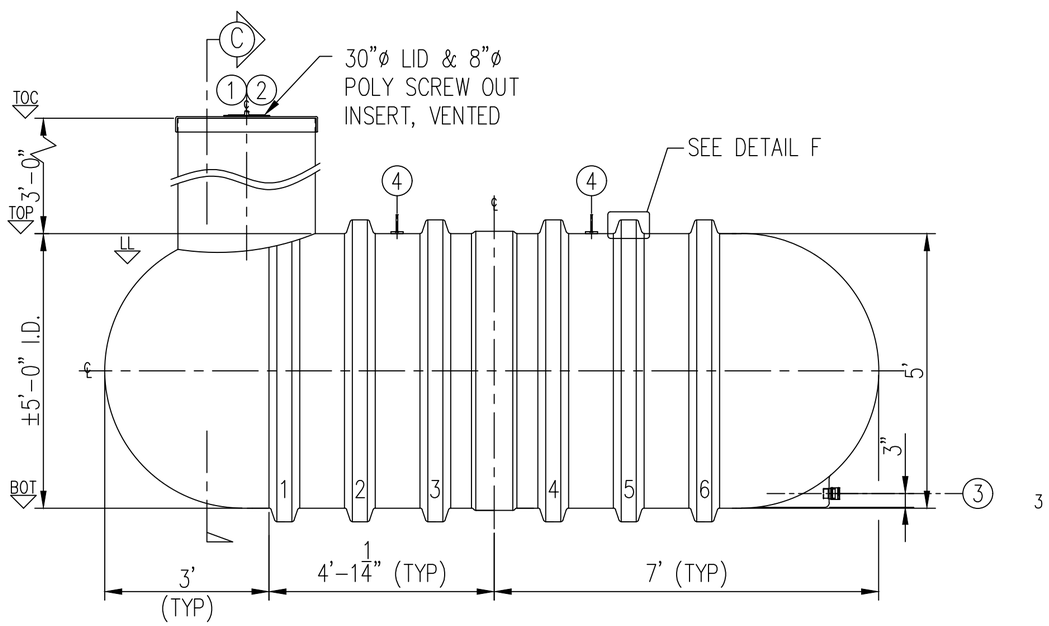

ELEVATION A

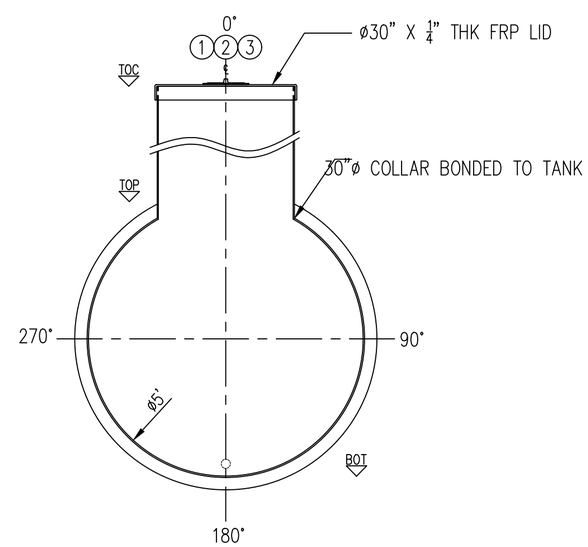

SECTION C

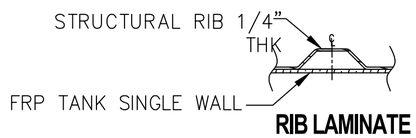

RIB LAMINATE DETAIL F

N T S

LEGEND:
TOC - TOP OF CAP LID
TOF - TOP OF FLANGE
TOP - TOP CYLINDER
BOT - BOTTOM CYLINDER
I/S - INSIDE
LL - LIQUID LEVEL
O.A.H.-OVERALL HEIGHT
O.A.L.-OVERALL LENGTH
I/S - INSIDE
O/S - OUTSIDE
ø - DIAMETER
° - DEGREE/S
TYP- TYPICAL
℄ - CENTER LINE
NTS - NOT TO SCALE

GENERAL NOTES

- CSA ANSI/NSF 61 CERTIFIED FRP POTABLE WATER TANK.
- RATED FOR 7' OF BURIAL DEPTH AND NO TRAFFIC LOADING.
- ALL DRILLED HOLES FLANGES TO BE COATED WITH RESIN..
- DIMENSIONS SHOWN IN FEET INCHES FORMAT OTHERWISE NOTED.
- 1/2" FABRICATION TOLERANCE. DOES NOT APPLY TO LAMINATE THICKNESS.

ITEM#	QTY	PART LIST	DESCRIPTION
1	1	30"CAP LID W/ 8"D POLY SCREW OUT INSERT, VENTED	FRP LID
2	1	30" MANWAY COLLAR	30"Ø FRP MANWAY
3	1	2" BULK HEAD	INLET
4	2	GALVANIZED STEEL WIRE ROPE	LIFT LUG
5			
6			
7			

SHELL THICKNESS:	0.300"	DRAWN:	
DISH HEAD THICKNESS:	0.300"	CHECKED:	
RIBS THICKNESS:	0.25" WITH 1 WR	DATE:	AUG. 12,2025
RIB SPACING:	16-1/2" CL TO CL	DESIGNED:	
WEIGHT:	340KG (750LBS)	APPROVED:	MPS
LENGTH:	4,267MM (14'-0")	MFG.:	DS
OVERALL CAPACITY:	6,820 L (1,500 IG/1,800 USG)	QA:	GA
		SALES:	TA

CLIENT: FRP/MOCOAT FIBERGLASS LTD.

TITLE: **W1500 FRP POTABLE WATER TANK**

FRPMOCOAT FIBERGLASS LTD.

SIZE:	DRAWING NUMBER:		REVISION:
C	W1500		0
SCALE: 1:25	WEIGHT:		SHEET: 1/1
	BURIAL DEPTH:	RATED 7'- 0"	