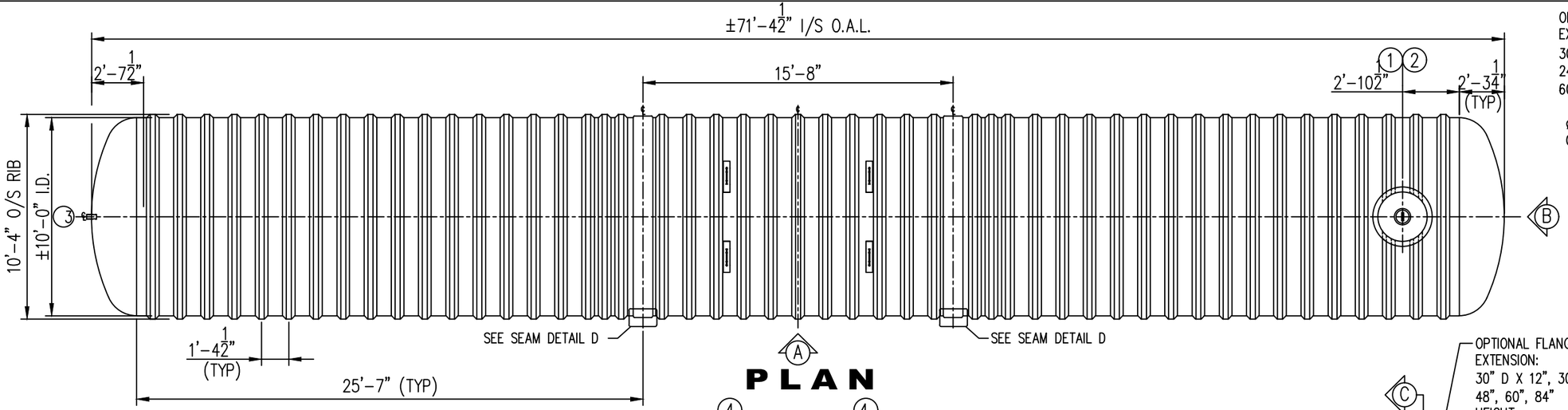


## PLAN

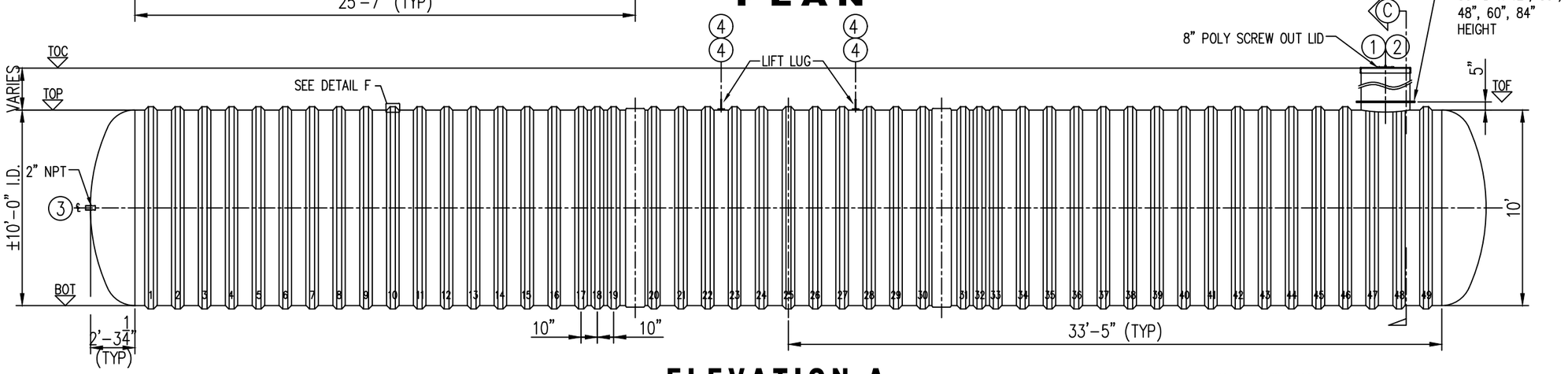


## ELEVATION A

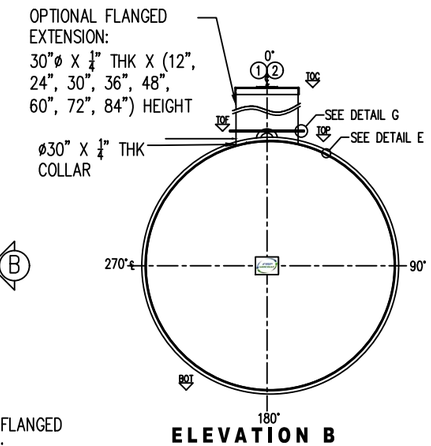


## ELEVATION B

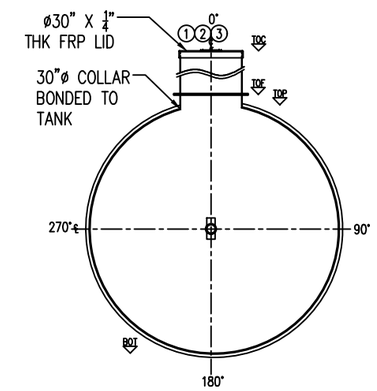


## SECTION C

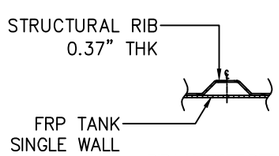


**RIB LAMINATE DETAIL F**
N T S

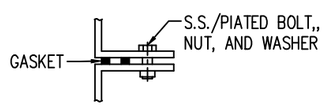


**FLANGE TO FLANGE CONNECTION DETAIL G**
N T S

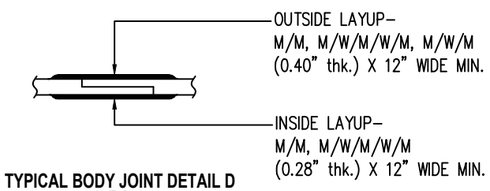


**TYPICAL BODY JOINT DETAIL D**
N T S

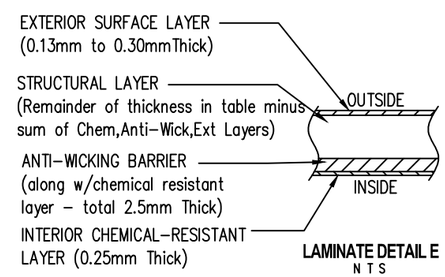


**LAMINATE DETAIL E**
N T S

LEGEND:
TOC - TOP OF CAP LID
TOF - TOP OF FLANGE
TOP - TOP CYLINDER
BOT - BOTTOM CYLINDER
I/S - INSIDE
LL - LIQUID LEVEL
O.A.H.-OVERALL HEIGHT
O.A.L.-OVERALL LENGTH
I/S - INSIDE
O/S - OUTSIDE
ø - DIAMETER
° - DEGREE/S
TYP- TYPICAL
℄ - CENTER LINE
NTS - NOT TO SCALE

GENERAL NOTES
- CSA ANSI/NSF 61 CERTIFIED FRP POTABLE WATER TANK.
- RATED FOR 10' OF BURIAL DEPTH AND NO TRAFFIC LOADING.
- ALL DRILLED HOLES FLANGES TO BE COATED WITH RESIN..
- DIMENSIONS SHOWN IN FEET INCHES FORMAT OTHERWISE NOTED.
- 1/2" FABRICATION TOLERANCE. DOES NOT APPLY TO LAMINATE THICKNESS.

| ITEM# | QTY | PART LIST | DESCRIPTION |
|---|---|---|---|
| 1 | 1 | 30"CAP LID W/ 8"D POLY SCREW OUT INSERT, VENTED | FRP LID |
| 2 | 1 | 30" MANWAY COLLAR | 30"Ø FRP MANWAY |
| 3 | 1 | 2" FRP NPT CONNECTION | OUTLET |
| 4 | 4 | CARBON STEEL LIFT LUG | LIFT LUG |
| 5 | | | |
| 6 | | | |
| 7 | | | |

| | | | |
|---|---|---|---|
| SHELL THICKNESS: | 0.575" | DRAWN: | EA/ATF |
| HEMI HEAD THICKNESS: | 1.030" | CHECKED: | MPS |
| RIBS THICKNESS: | 0.300"+2 WR (0.066")=.366"" | DATE: | AUG. 19,2025 |
| RIB SPACING: | 16 1/2" CL TO CL | DESIGNED: | FRP |
| WEIGHT: | 7,144 KG (15,750 LBS) | APPROVED: | MPS |
| LENGTH: | 21,755MM (71'-4 1/2") | MFG.: | DS |
| WORKING CAPACITY: | N/A | QA: | GA |
| OVERALL CAPACITY: | 155,100 L (34,117IG/41,012 USG) | SALES: | TA |

CLIENT: FRP/MOCOAT FIBERGLASS LTD.
TITLE: **BX34000W- DB FRP POTABLE WATER TANK**

**FRPMOCOAT**
FIBERGLASS LTD.

| SIZE: | DRAWING NUMBER: | | REVISION: |
|---|---|---|---|
| B | BX34000W- DB | | 0 |
| SCALE: | WEIGHT: | 7,144 KG (15,750 LBS) | SHEET: |
| - | BURIAL DEPTH: | RATED 10- 0" | 1/1 |