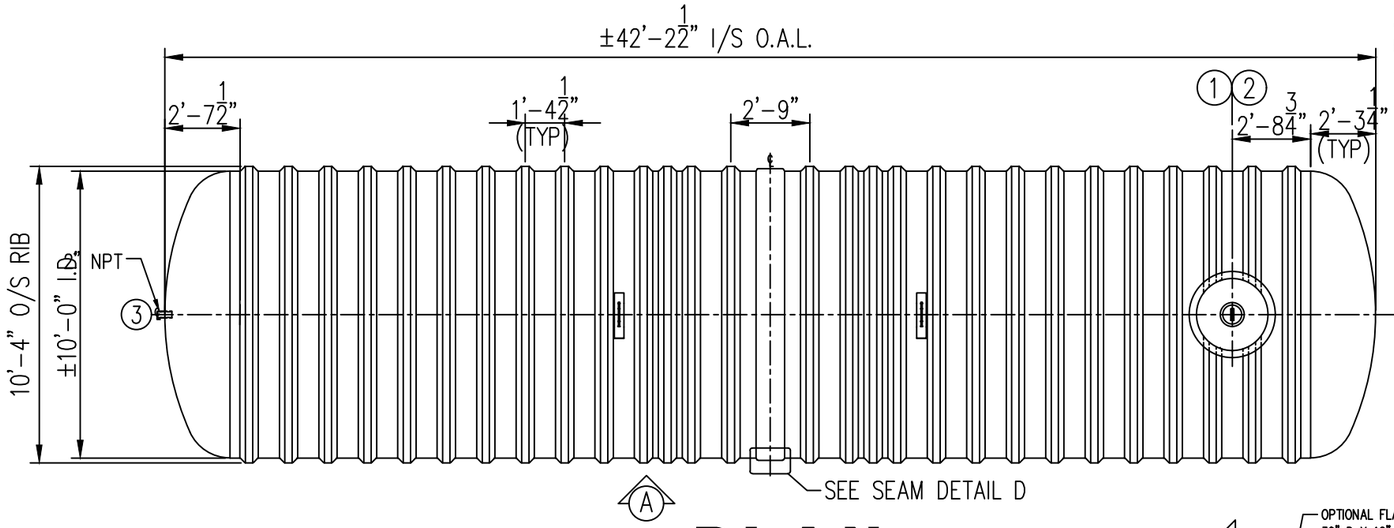

PLAN

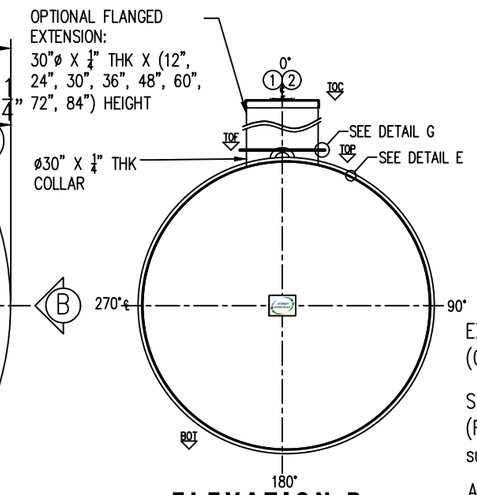

ELEVATION B

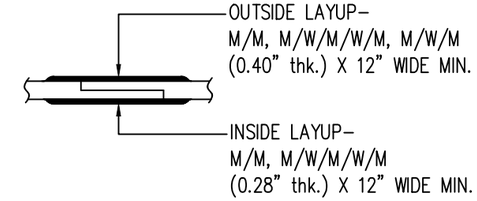

TYPICAL BODY JOINT DETAIL D
N T S

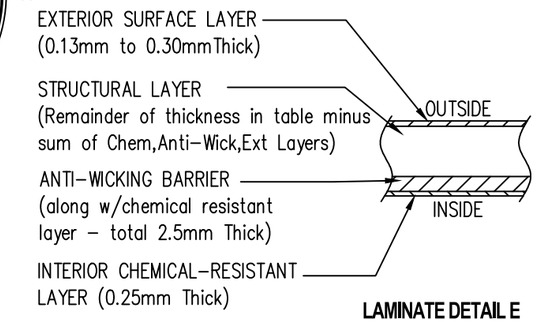

LAMINATE DETAIL E
N T S

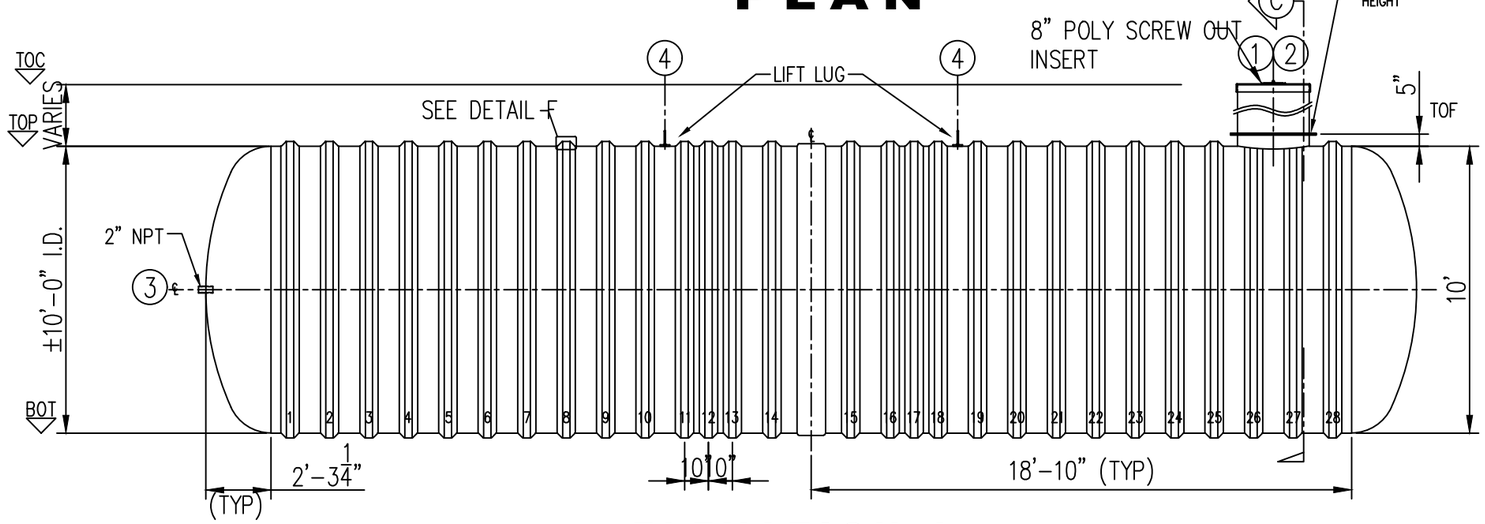

ELEVATION A

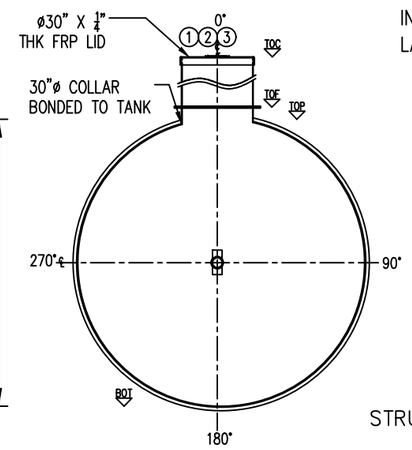

SECTION C

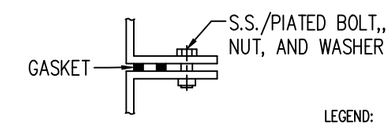

FLANGE TO FLANGE CONNECTION DETAIL G
N T S

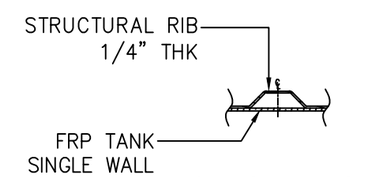

RIB LAMINATE DETAIL F
N T S

LEGEND:
TOC - TOP OF CAP LID
TOF - TOP OF FLANGE
TOP - TOP CYLINDER
BOT - BOTTOM CYLINDER
I/S - INSIDE
LL - LIQUID LEVEL
O.A.H.-OVERALL HEIGHT
O.A.L.-OVERALL LENGTH
I/S - INSIDE
O/S - OUTSIDE
ø - DIAMETER
° - DEGREE/S
TYP- TYPICAL
℄ - CENTER LINE
NTS - NOT TO SCALE

GENERAL NOTES
- CSA ANSI/NSF 61 CERTIFIED FRP POTABLE WATER TANK.
- RATED FOR 7' OF BURIAL DEPTH AND NO TRAFFIC LOADING.
- ALL DRILLED HOLES FLANGES TO BE COATED WITH RESIN..
- DIMENSIONS SHOWN IN FEET INCHES FORMAT OTHERWISE NOTED.
- 1/2" FABRICATION TOLERANCE. DOES NOT APPLY TO LAMINATE THICKNESS.

ITEM#	QTY	PART LIST	DESCRIPTION
1	1	30"CAP LID W/ 8"D POLY SCREW OUT INSERT, VENTED	FRP LID
2	1	30" MANWAY COLLAR	30"Ø FRP MANWAY
3	1	2" FRP NPT CONNECTION	OUTLET
4	2	CARBON STEEL LIFT LUG	LIFT LUG
5			
6			
7			

SHELL THICKNESS:	0.400"	DRAWN:	EA/ATF
HEMI HEAD THICKNESS:	0.940"	CHECKED:	MPS
RIBS THICKNESS:	0.25"	DATE:	AUG. 15,2025
RIB SPACING:	16 1/2" CL TO CL	DESIGNED:	FRP
WEIGHT:	3,356 KG (7,400 LBS)	APPROVED:	MPS
LENGTH:	12,865MM (42'-2 1/2")	MFG.:	DS
WORKING CAPACITY:	N/A	QA:	GA
OVERALL CAPACITY:	90,810 L (19,975IG/23,970 USG)	SALES:	TA

CLIENT: FRP/MOCOAT FIBERGLASS LTD.
TITLE: **BX20000W FRP POTABLE WATER TANK**
FRPMOCOAT FIBERGLASS LTD.

SIZE:	DRAWING NUMBER:		REVISION:
B	BX20000W		0
SCALE:	WEIGHT:	3,356 KG (7,400 LBS)	SHEET:
-	BURIAL DEPTH:	RATED 7'- 0"	1/1