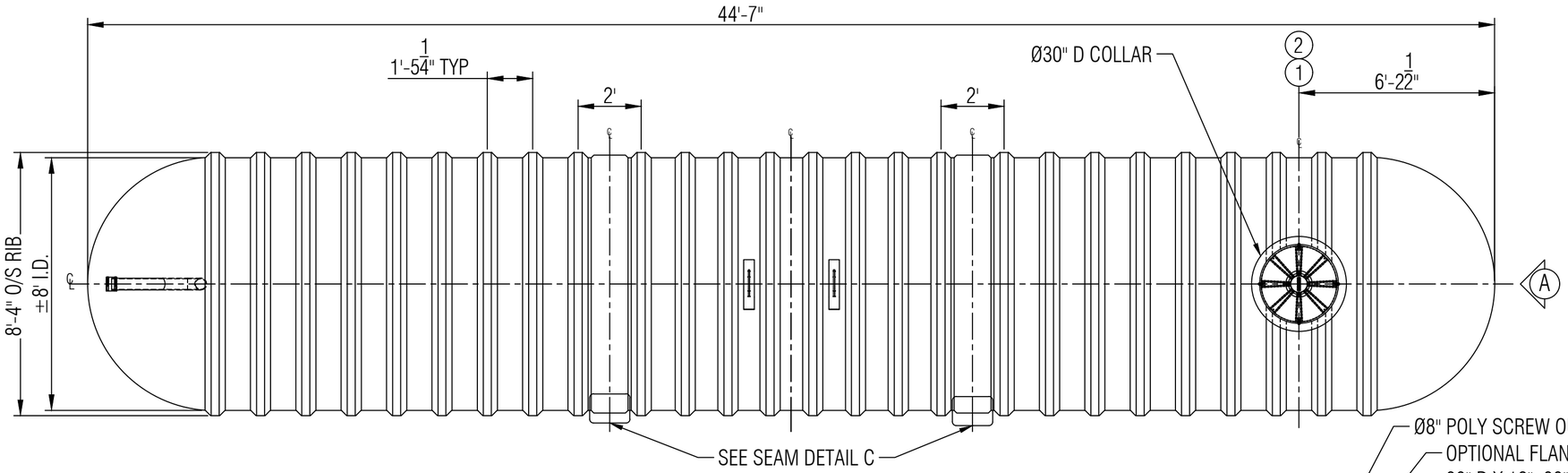


## PLAN

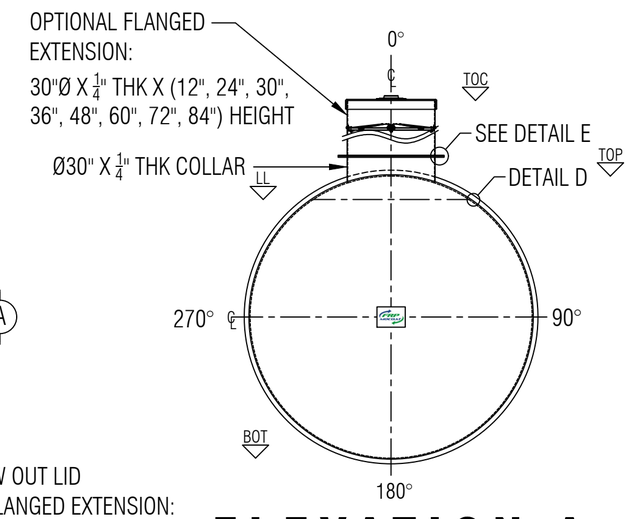


## ELEVATION A

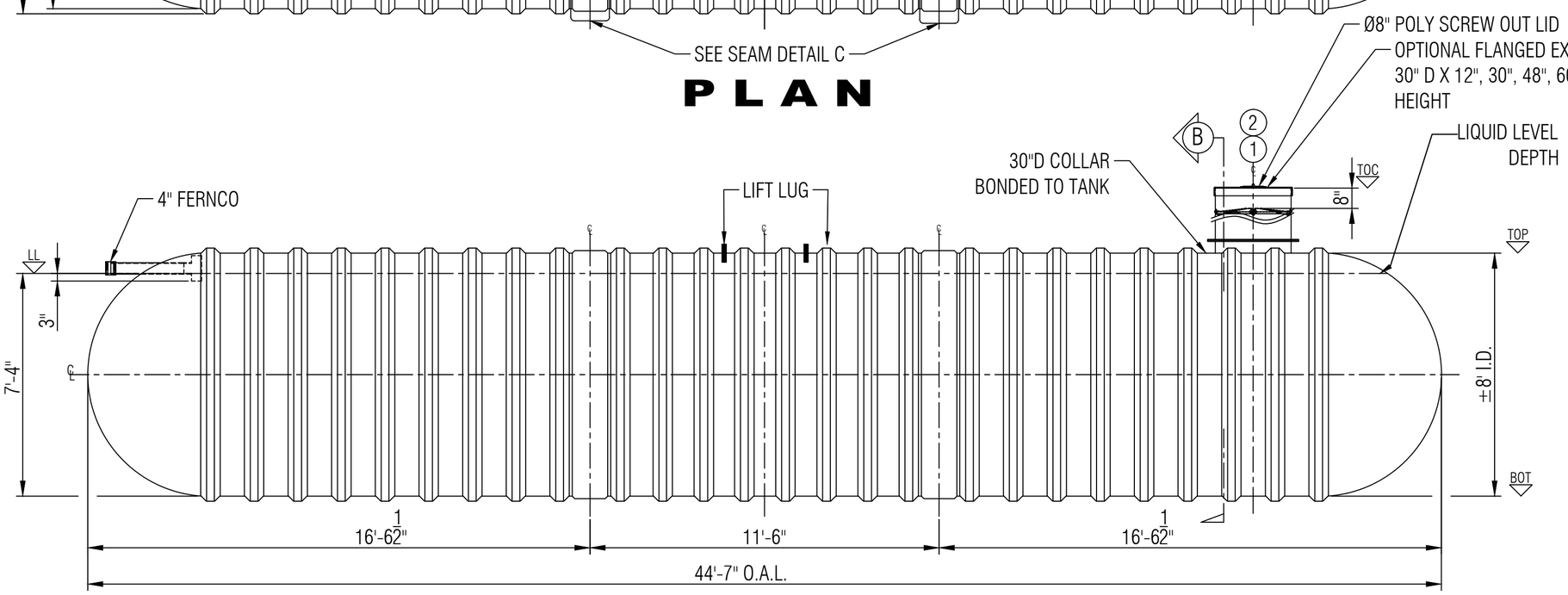


## ELEVATION

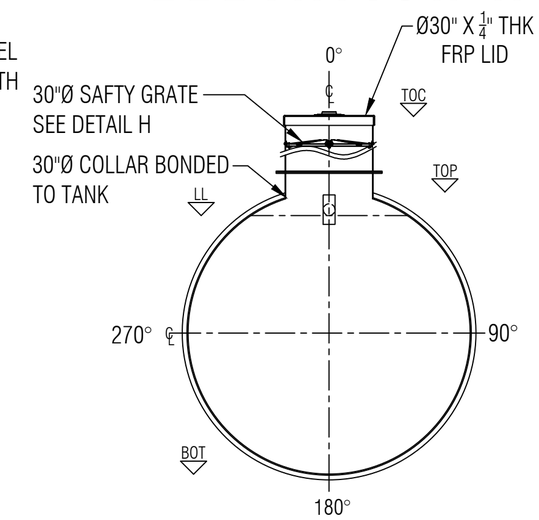


## SECTION B

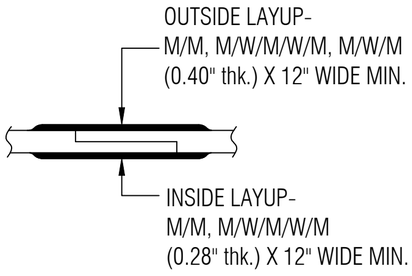


**TYPICAL BODY JOINT DETAIL C**
NTS

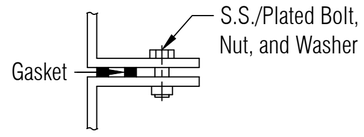


**FLANGE TO FLANGE CONNECTION DETAIL E**
NTS

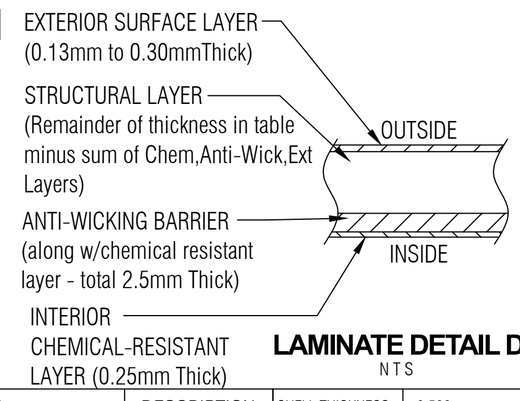


**LAMINATE DETAIL D**
NTS

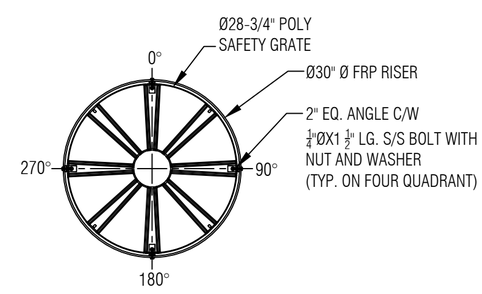


**6 SAFETY GRATE DETAIL H**
SCALE: 1:20

LEGEND:
TOC - TOP OF CAP LID
TOF - TOP OF FLANGE
TOP - TOP CYLINDER
BOT - BOTTOM CYLINDER
I/S - INSIDE
LL - LIQUID LEVEL
O.A.H.-OVERALL HEIGHT
O.A.L.-OVERALL LENGTH
I/S - INSIDE
O/S - OUTSIDE
Ø - DIAMETER
° - DEGREE/S
TYP- TYPICAL
℄ - CENTER LINE
NTS - NOT TO SCALE

GENERAL NOTES:
- CSA B66 CERTIFIED FRP TANK FOR SEWAGE HOLDING TANK.
- RATED FOR 7' OF BURIAL DEPTH AND NO TRAFFIC LOADING.
- ALL DRILLED HOLES FLANGES TO BE COATED WITH RESIN.
- SAFETY GRATE CAN WITHSTAND 91 KG. OF DEAD LOAD.
- DIMENSIONS SHOWN IN FEET INCHES FORMAT OTHERWISE NOTED.
- 1/2" FABRICATION TOLERANCE. DOES NOT APPLY TO LAMINATE THICKNESS.

| ITEM# | QTY | PART LIST | DESCRIPTION |
|---|---|---|---|
| 1 | 1 | 30" CAP LID W/ 8"D POLY SCREW OUT INSERT | |
| 2 | 1 | 30"Ø MANWAY COLLAR | 30"Ø FRP COLLAR |
| 3 | 1 | 4" FERNCO | FLEXIBLE CONNECTOR |
| 4 | 1 | 4"Ø PVC PIPE & TEEWYE | INLET |
| 5 | 2 | MILD STEEL | LIFT LUGS |
| 6 | 1 | POLYETHYLENE SAFETY GRATE C/W HARDWARE | SAFETY GRATE |
| 7 | | | |

| | | | |
|---|---|---|---|
| SHELL THICKNESS: | 0.500" | DRAWN: | CCL/ATF |
| HEMI HEAD THICKNESS: | 0.650" | CHECKED: | ATF |
| RIBS THICKNESS: | 0.25" | DATE: | DEC 10, 2024 |
| RIB SPACING: | 17-1/4" (CL to CL) | DESIGNED: | FRP |
| LENGTH: | 13,576MM (44'-7") | APPROVED: | MPS |
| WORKING CAPACITY: | 57,485L (12,645 IG/15,174 USG) | MFG: | |
| OVERALL CAPACITY: | 59,644L (13,120 IG/15,744 USG) | PM: | |
| | | SALES: | |

CLIENT: FRP/MOCOAT
TITLE: **B13000S FIBERGLASS HOLDING TANK**

**FRPMOCOAT**
FIBERGLASS LTD.

| SIZE | DRAWING NUMBER: | REVISION |
|---|---|---|
| C | B13000S | 0 |

| SCALE | WEIGHT: | 2,2880 KG (6,350 LBS) | SHEET |
|---|---|---|---|
| 1:40 | BURIAL DEPTH: | RATED 7'-0" | 1/1 |