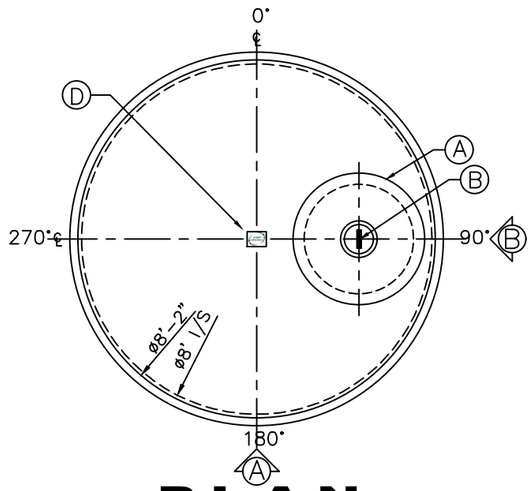

PLAN

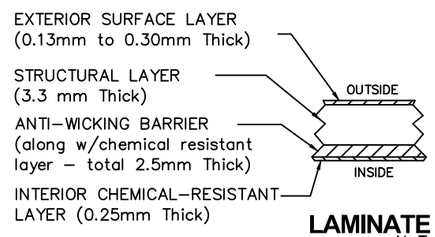

LAMINATE DETAIL 1
N T S

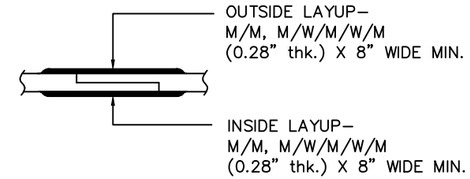

TYPICAL BODY JOINT DETAIL 2
N T S

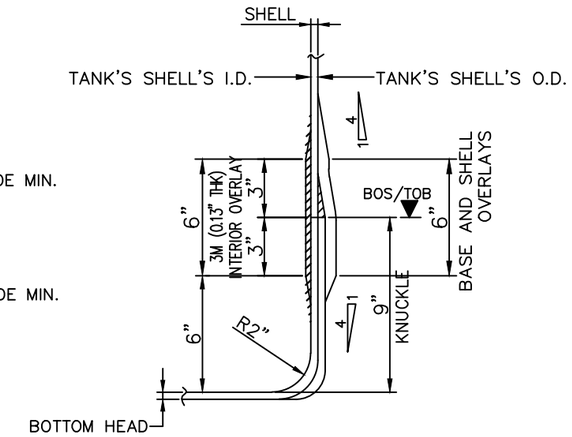

KNUCKLE/BASE/TOP/SHELL DETAIL 3
N T S

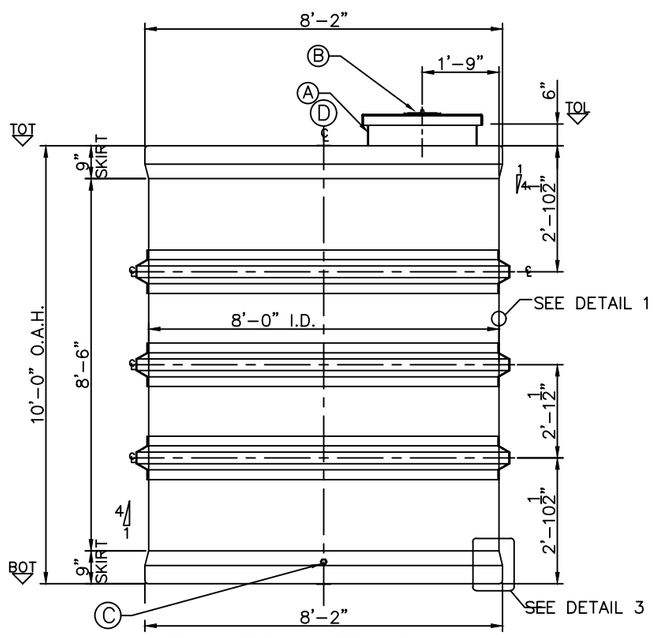

ELEVATION A

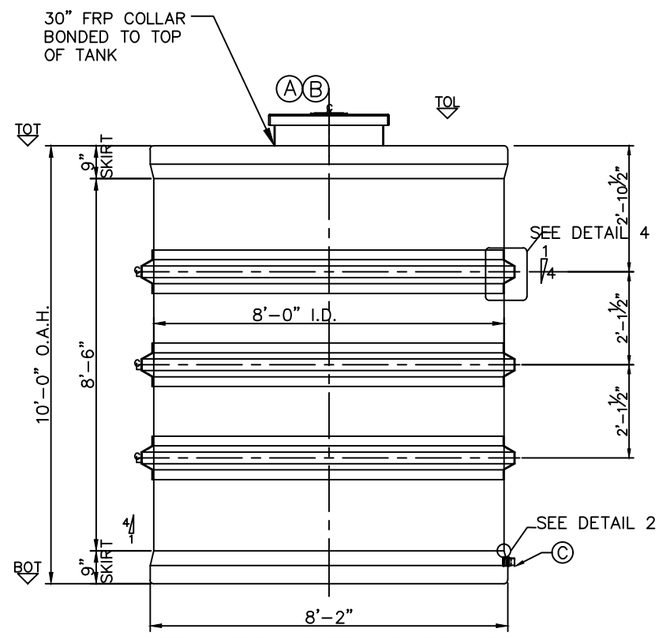

ELEVATION A

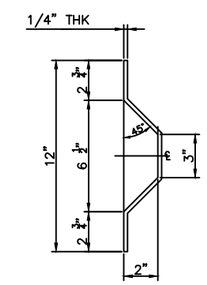

SHELL RIB DETAIL 4
N T S

LEGEND:
TOT – TOP OF TANK
TOL – TOP OF LID
TOF – TOP OF FLANGE
BOT – BOTTOM OF TANK
O.A.H.–OVERALL HEIGHT
O.A.L.–OVERALL LENGTH
I/S – INSIDE
O/S – OUTSIDE
ø – DIAMETER
° – DEGREE/S
TYP– TYPICAL
℄ – CENTER LINE
NTS – NOT TO SCALE

GENERAL NOTES
- CSA ANSI/NSF 61 CERTIFIED FRP POTABLE WATER TANK.
- ONE PIECE TANK.
- ALL DRILLED HOLES FLANGES TO BE COATED WITH RESIN.
- DIMENSIONS SHOWN IN FEET INCHES FORMAT OTHERWISE NOTED.
- 1/2" FABRICATION TOLERANCE. DOES NOT APPLY TO LAMINATE THICKNESS.

ITEM#	QTY	PART LIST	DESCRIPTION
A	1	30" Ø FRP COLLAR	30"Ø FRP MANWAY
B	1	30" Ø VENTED POLY LID W/ 8"D POLY SCREW OUT INSERT	FRP LID
C	1	2" BULK HEAD	OUTLET
D	1	NAMEPLATE	
E			
F			
G			

WEIGHT:	680KG (1,500LBS.)	DRAWN:	EA/ATF
WORKING CAPACITY:	N/A	CHECKED:	MPS
OVERALL CAPACITY:	13,640L (3,000 IG/3,600 USG)	DATE:	AUG. 22,2025
		DESIGNED:	FRP
		APPROVED:	MPS
		MFG.:	DS
		QA:	GA
		SALES:	TA

CLIENT: FRP/MOCOAT FIBERGLASS LTD.
TITLE: **AGW3000-L FRP POTABLE WATER TANK**

FRPMOCOAT
FIBERGLASS LTD.

SIZE:	DRAWING NUMBER:		REVISION:
B	AGW3000- L		0
SCALE: 1:40	EST#:	SO#:	SHEET: 1/1
	PO#:	JOB#:	