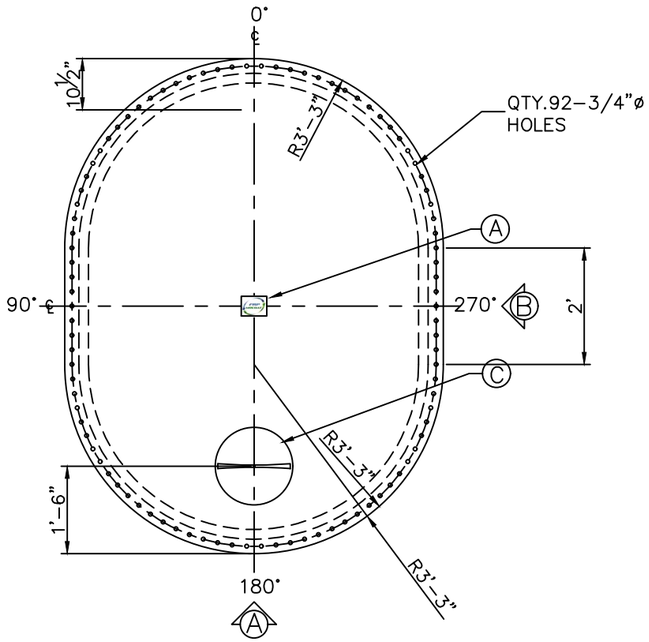

PLAN

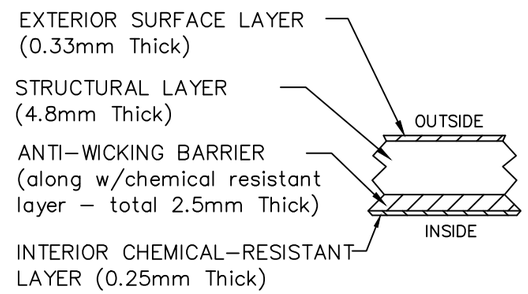

LAMINATE DETAIL 1
N T S

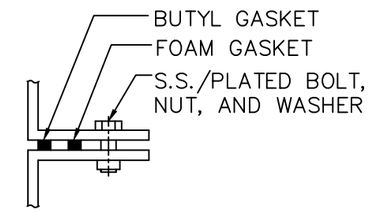

FLANGE TO FLANGE CONNECTION DETAIL 2
N T S

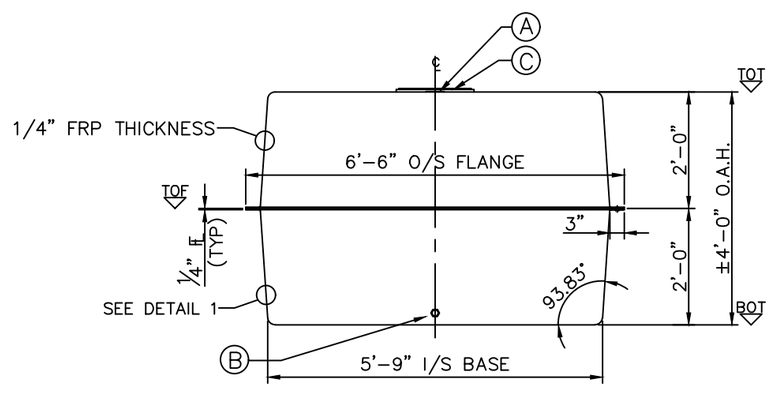

ELEVATION A

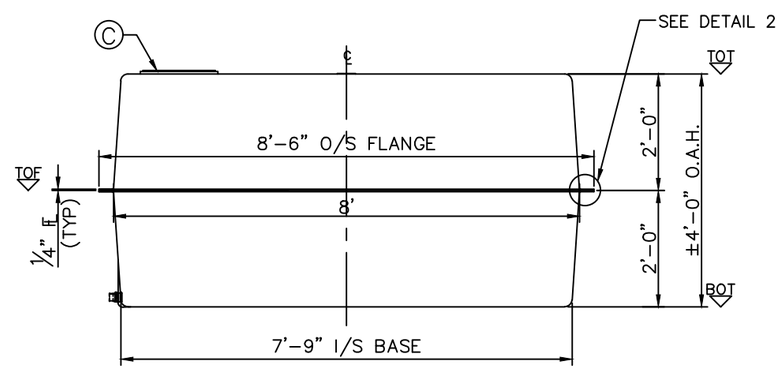

ELEVATION B

LEGEND:
TOL – TOP OF LID
TOF – TOP OF FLANGE
BCD – BOLT CENTER DIAMETER
TOP – TOP CYLINDER
BOT – BOTTOM CYLINDER
O.A.H.–OVERALL HEIGHT
O.A.L.–OVERALL LENGTH
I/S – INSIDE
O/S – OUTSIDE
ø – DIAMETER
° – DEGREE/S
TYP– TYPICAL
℄ – CENTER LINE
NTS – NOT TO SCALE

GENERAL NOTES
- CSA ANSI/NSF 61 CERTIFIED FRP POTABLE WATER TANK.
- TANK COMES UNASSEMBLED FROM FACTORY.
- ALL DRILLED HOLES FLANGES TO BE COATED WITH RESIN.
- DIMENSIONS SHOWN IN FEET INCHES FORMAT OTHERWISE NOTED.
- 1/2" FABRICATION TOLERANCE. DOES NOT APPLY TO LAMINATE THICKNESS.

ITEM#	QTY	PART LIST	DESCRIPTION
A	1	NAMEPLATE	
B	1	1 1/4" BULK HEAD	OUTLET
C	1	16" Ø VENTED POLY LID	FRP LID
D			
E			
F			
G			

WEIGHT:	159KG (350LBS.)	DRAWN:	EA/ATF
WORKING CAPACITY:	N/A	CHECKED:	MPS
OVERALL CAPACITY:	4,546 L (1,000 IG/1,200 USG)	DATE:	AUG. 21,2025
		DESIGNED:	FRP
		APPROVED:	MPS
		MFG.:	DS
		QA:	GA
		SALES:	TA

CLIENT: FRP/MOCOAT FIBERGLASS LTD.
TITLE: **AGW1000- OV FRP POTABLE WATER TANK**
FRPMOCOAT FIBERGLASS LTD.

SIZE:	DRAWING NUMBER:		REVISION:
B	AGW1000- OV		0
SCALE: 1:30	EST#:	SO#:	SHEET: 1/1
	PO#:	JOB#:	