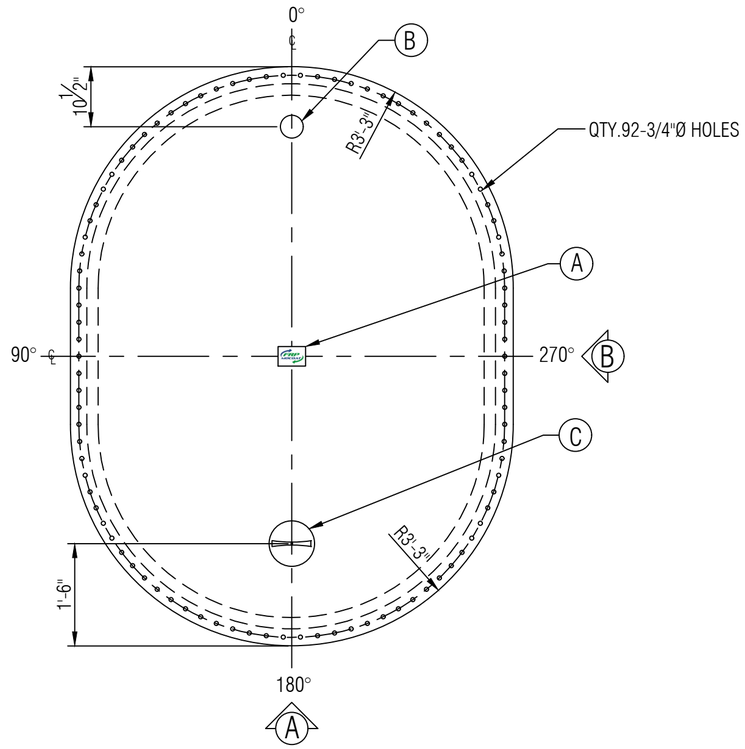

PLAN

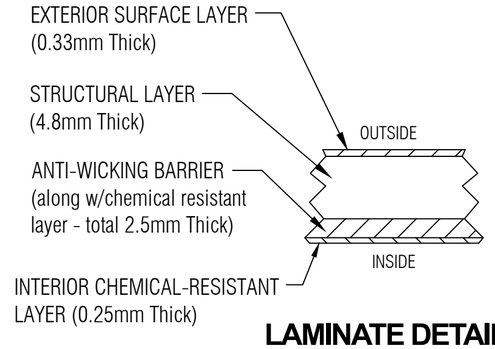

LAMINATE DETAIL 1

N T S

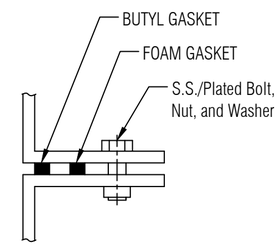

FLANGE TO FLANGE CONNECTION DETAIL 2

N T S

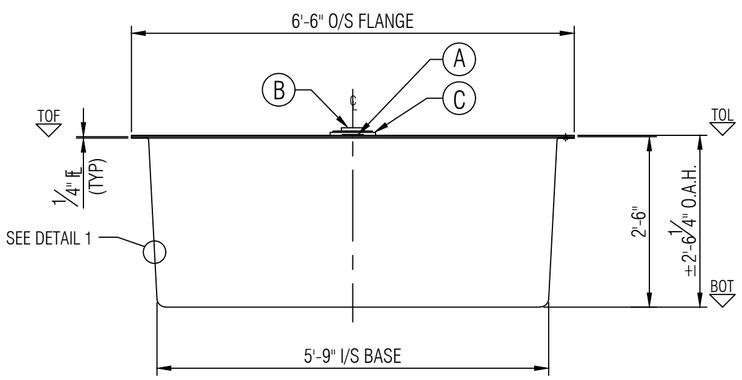

ELEVATION A

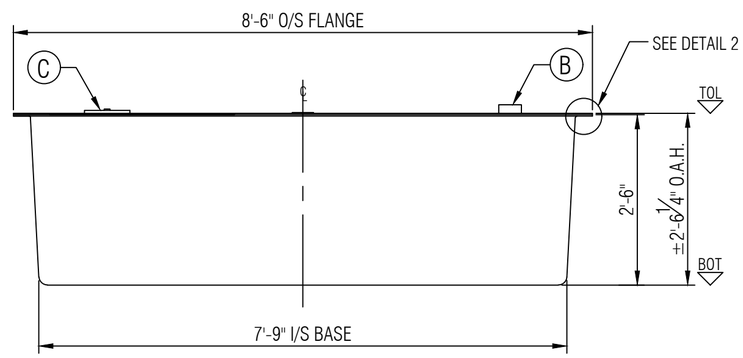

ELEVATION B

GENERAL NOTES:
- CSA B66 CERTIFIED FOR SEWAGE STORAGE TANK.
- TANK COMES UNASSEMBLED FROM FACTORY.
- DIMENSIONS SHOWN IN FEET INCHES FORMAT OTHERWISE NOTED.
- 1/2" FABRICATION TOLERANCE. DOES NOT APPLY TO LAMINATE THICKNESS.

LEGEND:
TOL - TOP OF LID
TOF - TOP OF FLANGE
BCD - BOLT CENETR DIAMETER
BOT - BOTTOM OF TANK
I/S - INSIDE
O.A.H.-OVERALL HEIGHT
O.A.L.-OVERALL LENGTH
I/S - INSIDE
O/S - OUTSIDE
Ø - DIAMETER
° - DEGREE/S
TYP- TYPICAL
℄ - CENTER LINE
NTS - NOT TO SCALE

ITEM#	QTY	PART LIST/DESCRIPTION
A	1	NAMEPLATE
B	1	4"Ø PVC-DWV COUPLING - INLET
C	1	8"Ø NON-VENTED POLY LID
D		
E		
F		
G		

APPROX. WEIGHT:	127KG (280LBS.)
OVERALL CAPACITY:	2,841 L (625 IG/750 USG)

DRAWN:	ATF
CHECKED:	
DATE:	JAN 21, 2025
DESIGNED:	
APPROVED:	MPS
MFG:	DS
PM:	GA
SALES:	DG

CLIENT: FRP/MOCOAT FIBERGLASS LTD.
TITLE: **AGS-625-OV SEWAGE STORAGE TANK**

FRPMOCOAT FIBERGLASS LTD.

SIZE	DRAWING NUMBER:	REVISION
C	AGS-625-OV	0

SCALE	EST#:	SO#:	SHEET
1:20	PO#:	JOB#:	1/1