REVISION HISTORY			
REV	DESCRIPTION	DATE	APPROVED
1	RIB SPACING	9/30/2010	JMC
2	DRAWING REVISION	3/4/2014	MPS

PARTS LIST			
ITEM	QTY	PART NUMBER	DESCRIPTION
1	1	C-COLLAR-30IN	30"D COLLAR
2	1	C-LID-30IN-STD	30"D STANDARD LID
3	20	C-RIB	STRUCTURAL RIB
4	1	C-SEAM-10FT	SEAM
5	2	LIFT LUG-PLATE	LIFT LUG
6	1	CONNECTION-4IN-STUB PIPE	4"D STUB PIPE-INLET

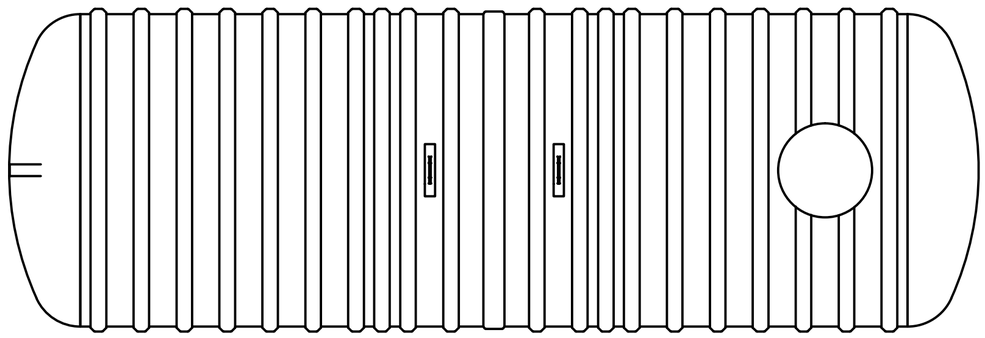

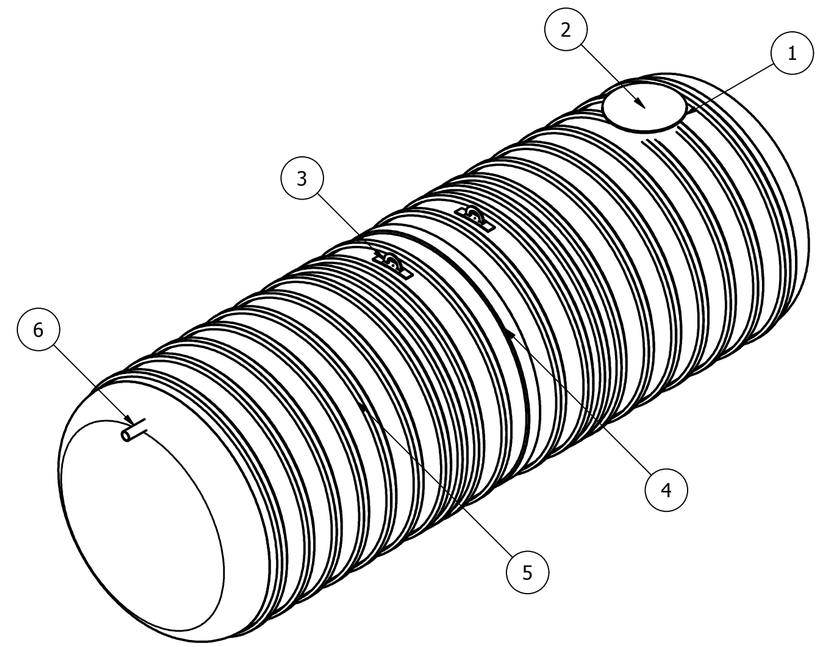

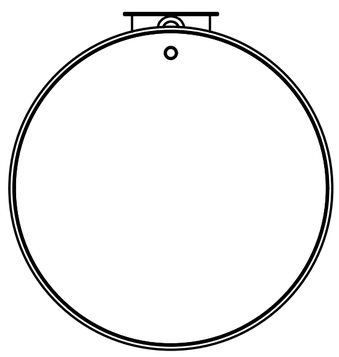

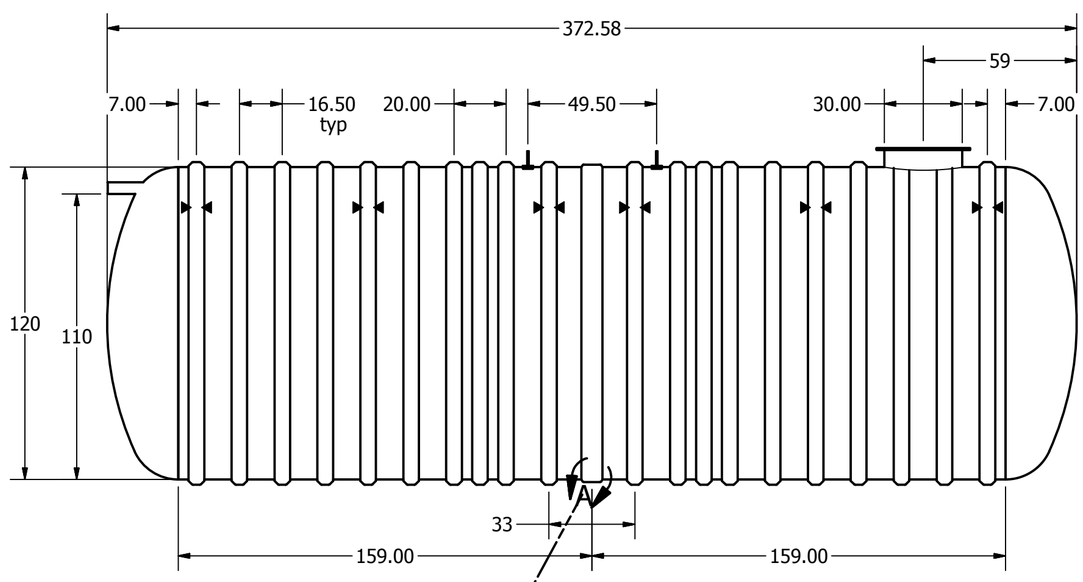

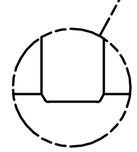

11mm x 350mm FRP
bond on Outside

SECTIONAL JOINT DETAIL A
SCALE 1/15

▶ ◀ Anchor Location

Item	(")	C	Item	(")
Cylinder Thickness	0.400"		Liquid Depth (holding tank)	110"
End Cap Thickness	0.94"		Septic Chamber Depth	N/A
Inlet Height (C.L.)	112"		Effluent Chamber Depth	N/A
Outlet Height (C.L.)	N/A		Chamber Wall Dimensions	N/A
Inlet Diameter	4"		Height:	N/A
Outlet Diameter	N/A		Thickness:	N/A
Rib Dimension (C to C)	16.5"		Opening Diameter:	N/A

DRAWN marks	7/19/2022	TITLE BX14000S UNDERGROUND FIBREGLASS SEWAGE HOLDING TANK	
CHECKED			
MFG			
APPROVED			
WEIGHT 2,631 kg (5,800 lbs)	LENGTH 31' 1"	SIZE C	DWG NO BX14000S-02 / REV 2
WORKING CAPACITY 62,910L (13,838 IG, 16,606 USG)			
OVERALL CAPACITY 65,410L (14,388 IG, 17,266 USG)		SCALE 7' Burial Depth	SHEET 1 OF 2