Parts List			
ITEM	QTY	PART NUMBER	DESCRIPTION
1	1	C-COLLAR-30IN	30"D COLLAR
2	4	LIFT-LUG-8-10	LIFT LUG
3	1	SEAM-10FT	SEAM
	6	C-RIB-GUIDE	STURUCTURAL RIB WITH ANCHOR GUIDE
5	12	C-RIB	STRUCTURAL RIB

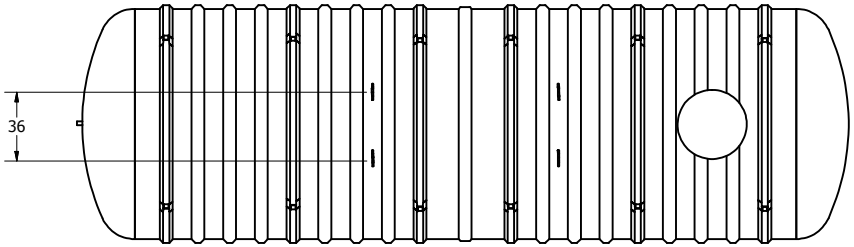

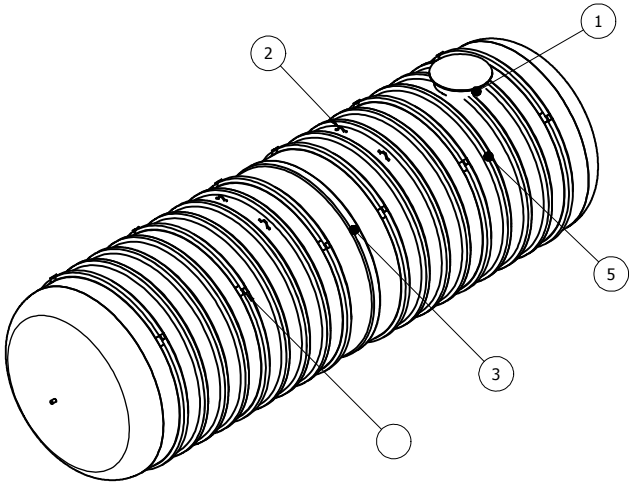

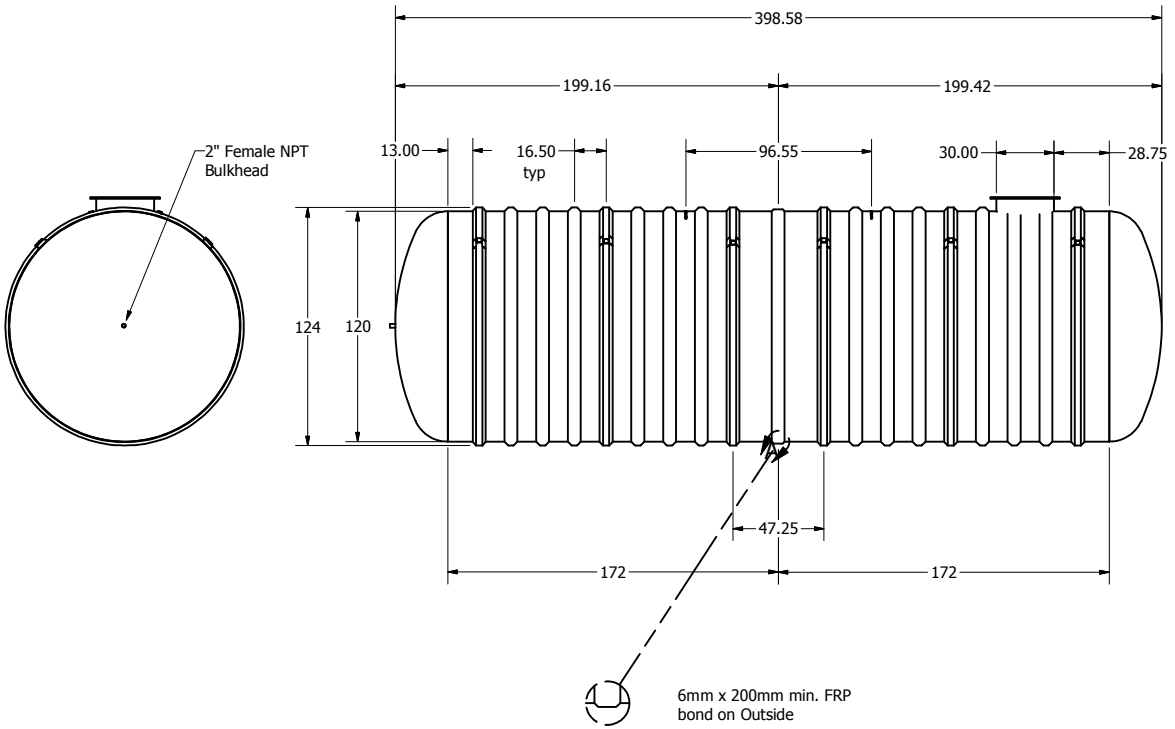

SECTIONAL JOINT DETAIL A
SCALE 1 / 25

OPTIONAL	PARTS
__ 30"X12" EXTENSION	__ ANCHORS
__ 30"X30" EXTENSION	__ FOAM INSULATION
__ 30"X60" EXTENSION	__ LOCK BAR
__ 30"X84" EXTENSION	__ OPTIONAL FITTING(S)
__ ALARM	__ PUMP STAND

DRAWN MPS	7/19/2022	TITLE: BX15000W UNDERGROUND FIBREGLASS WATER CISTERN
CHECKED		
QA		
MFG DCL		
APPROVED DCL		
CAPACITY 68,190L (15,000 IG)	LENGTH 33' 3"	

Drinking Water NSF/ANSI 61

SIZE	DWG NO	REV
C	BX15000W	1

SCALE

SHEET 1 OF 1